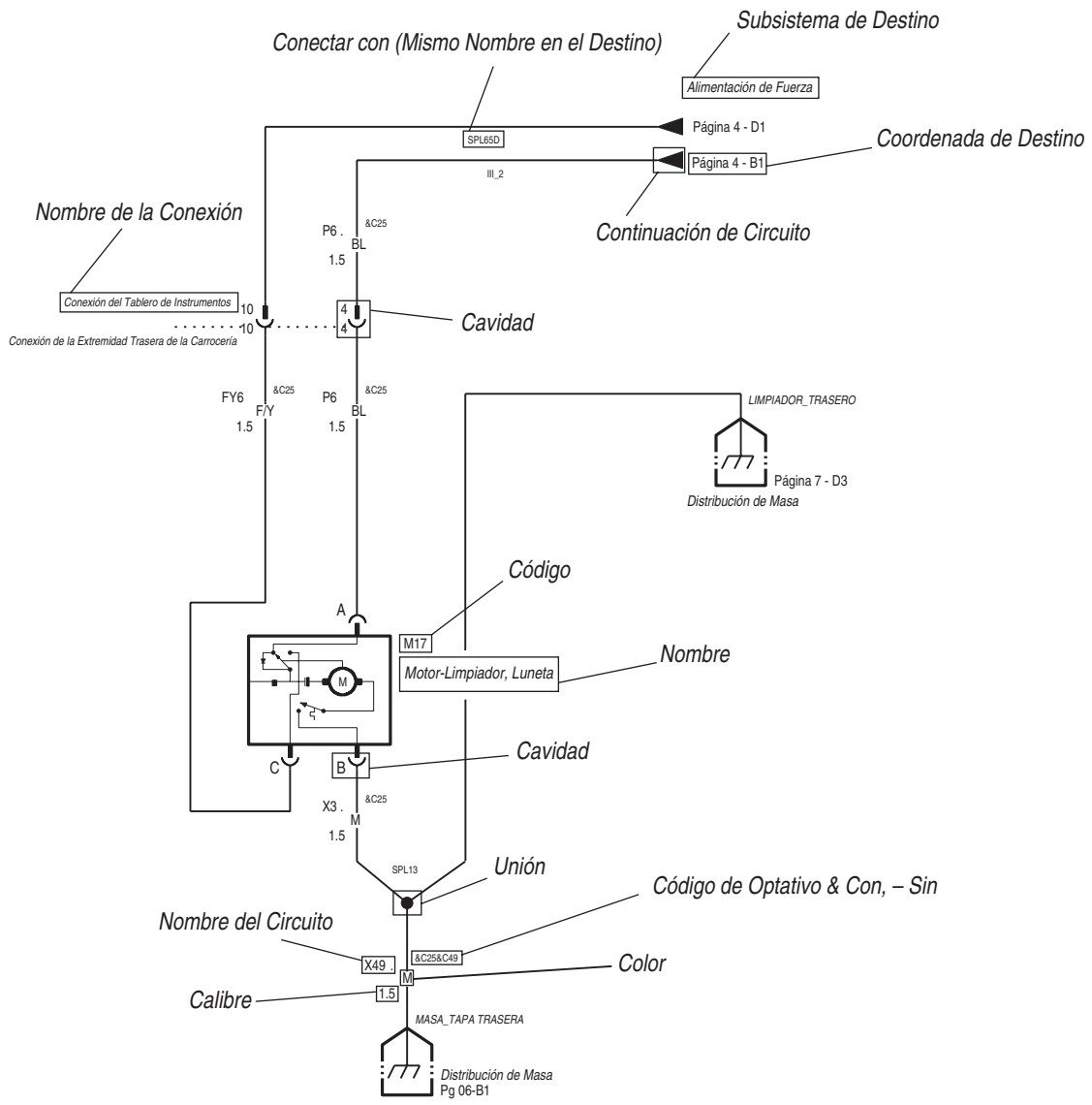
Subsistema de Destino
Conectar con (Mismo Nombre en el Destino)
Alimentación de Fuerza
SPL65D
Página 4 - D1
Coordenada de Destino
Página 4 - B1
III_2
Nombre de la Conexión
Continuación de Circuito
P6 .
&C25
BL
1.5
Conexión del Tablero de Instrumentos
10
10
4
4
Cavidad
Conexión de la Extremidad Trasera de la Carrocería
FY6
&C25
F/Y
1.5
P6
&C25
BL
1.5
LIMPIADOR_TRASERO
Página 7 - D3
Distribución de Masa
Código
A
M17
Motor-Limpiador, Luneta
Nombre
M
C
B
Cavidad
X3 .
&C25
M
1.5
SPL13
Unión
Código de Optativo & Con, – Sin
Nombre del Circuito
X49 .
&C25&C49
M
Color
Calibre
1.5
MASA_TAPA TRASERA
Distribución de Masa
Pg 06-B1

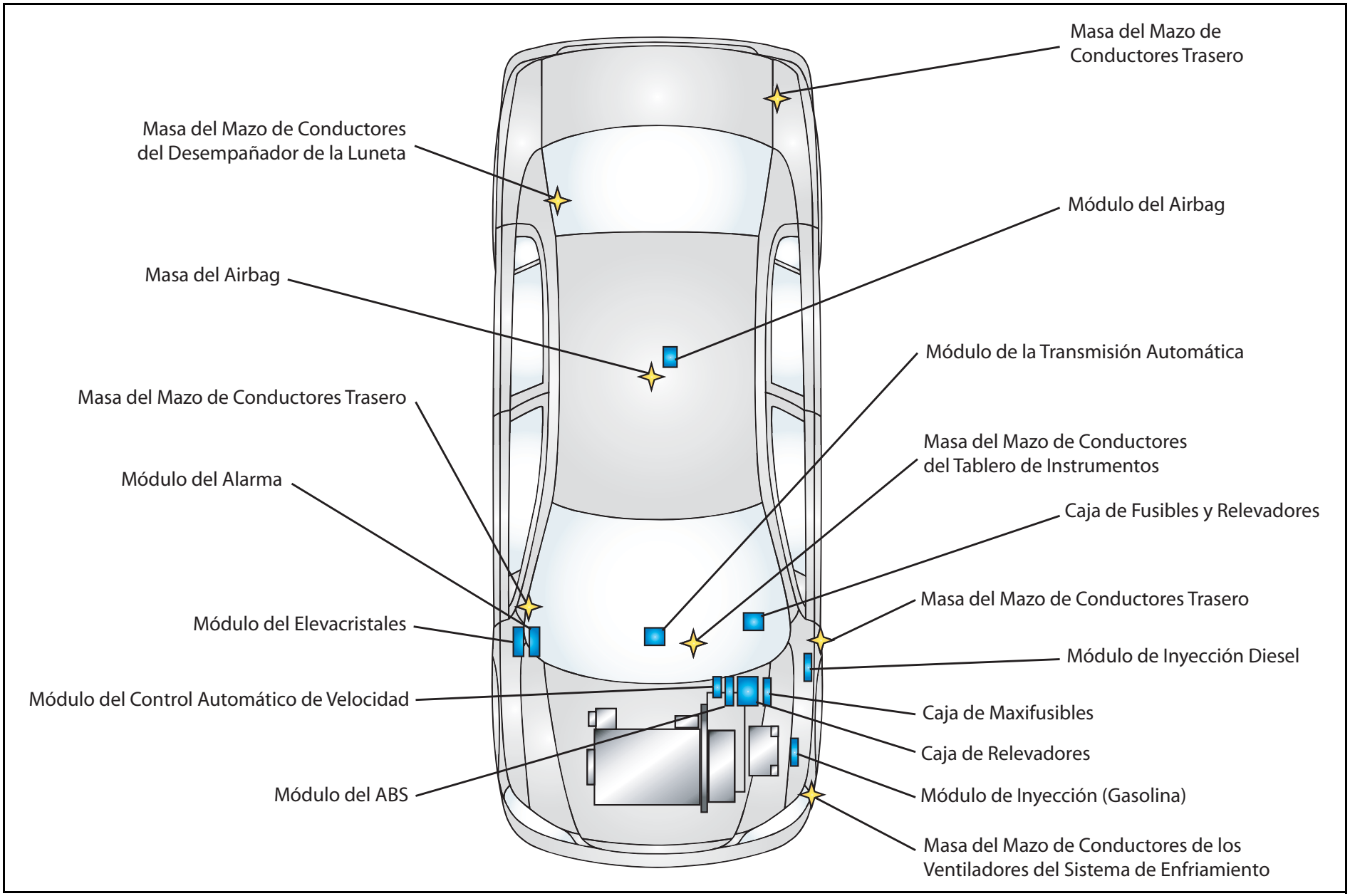
Masa del Mazo de Conductores Trasero
Masa del Mazo de Conductores del Desempañador de la Luneta
Módulo del Airbag
Masa del Airbag
Módulo de la Transmisión Automática
Masa del Mazo de Conductores Trasero
Masa del Mazo de Conductores del Tablero de Instrumentos
Módulo del Alarma
Caja de Fusibles y Relevadores
Masa del Mazo de Conductores Trasero
Módulo del Elevacristales
Módulo de Inyección Diesel
Módulo del Control Automático de Velocidad
Caja de Maxifusibles
Caja de Relevadores
Módulo del ABS
Módulo de Inyección (Gasolina)
Masa del Mazo de Conductores de los Ventiladores del Sistema de Enfriamiento

Cód.	Descripción
A31	CRISTAL ELÉCTRICO, TODAS LAS PUERTAS
A32	CRISTAL ELÉCTRICO, PUERTAS DELANTERAS
A90	TRABA DE LA TAPA TRASERA, MANDO ELÉCTRICO DE LIBERACIÓN
AJ7	SISTEMA SEGURIDAD SUPLEMENTAR, INFLABLE, CONDUCTOR Y PASAJERO, DELANTERO & LATERAL
AK5	SISTEMA DE SEGURIDAD SUPLEMENTAR, INFLABLE, CONDUCTOR Y PASAJERO
AU0	MANDO DE TRABAMIENTO, LLAVE CON MANDO A DISTANCIA
AU6	BLOQUEO DE LA LUNETA, LIBERACIÓN A TRAVÉS DE MANDO A DISTANCIA
BAH	EQUIPAMIENTO DEL SISTEMA DE SEGURIDAD, INMOVILIZADOR, SEGUNDA GENERACIÓN
C21	SISTEMA DE LIMPIALUNETA, TEMP., CON MARCHA ATRÁS ACTIVADA
C25	SISTEMA DE LIMPIADOR DE LA LUNETA, TEMPORIZADOR
C46	SISTEMA DE CALENTAMIENTO Y VENTILACIÓN DE ALTA CAPACIDAD
C60	SISTEMA DEL ACONDICIONADOR DE AIRE, MANDO MANUAL
C68	SISTEMA DEL ACONDICIONADOR DE AIRE AUTOMÁTICO, MANDO ELECTRÓNICO
C87	LUZ DE CORTESÍA
C89	LUZ DE LECTURA EN EL TECHO, SENCILLA
CD6	SISTEMA DEL LIMPIALUNETA, TEMPORIZADOR
CF5	TECHO SOLAR, CRISTAL, CORREDIZO, ELÉCTRICO
D76	ESPEJO RETROVISOR LD & LI, MANDO A DISTANCIA ELÉCTRICO, LD CONVEXO
DD8	ESPEJO RETROVISOR INTERIOR ELECTROCRÓMICO

Cód.	Descripción
JL9	SISTEMA DE FRENO A DISCO DELANTERO Y TRASERO, ABS, DELANTERO & TRASERO
K09	ALTERNADOR DE 120 AMPERIOS
K34	CONTROL AUTOMÁTICO DE VELOCIDAD
L34	MOTOR GAS, 4 CIL, 2.0L, MFI DOHC
L73	MOTOR GAS, 4 CIL, 1.6L
LD3	MOTOR DIESEL, 4 CIL, 2.0 OHC, L4, TURBO-LOW, HO, OPL
LE4	MOTOR GAS, 4 CIL, 2.0 MFI, OHC
LR3	MOTOR ALCOHOL, 4 CIL, 1.8, MFI, L4 BRA
M79	TRANSMISIÓN MAN. 5 MARCHAS, ISUZU, 72MM, 3.41 1ST, 1.95 2ª, .70 5ª
MG1	TRANSMISIÓN MAN. 5 MARCHAS, GETRAG, F23, 75MM, 3.58 1ª, 0.69 5ª
MG3	TRANSMISIÓN MANUAL 5 MARCHAS, GETRAG, F23, 75 MM, 3.58 1ª, 2.02 2ª, 1.35 3ª
ML3	TRANSMISIÓN MANUAL 5 VELOCIDADES
ML4	TRANSMISIÓN AUTOMÁTICA 4 VELOCIDADES, HMD, 4L30-E, EMBRAGUE CONVENCIONAL
T56	DEFLECTOR AERODINÁMICO TRASERO, TECHO DEPORTIVO
T79	LUZ DE COLA ANTINIEBLA
T96	FARO ANTINIEBLA
TX1	PAQUETE DE CONVENIENCIA
UA6	SISTEMA ALARMA ANTIRROBO
UD8	RELOJ DIGITAL & TEMPERATURA EXTERIOR
UV5	AVISO PARA INSPECCIÓN
W8X	PROVISTO PARA INSTALACIÓN DE LA RADIO

Cores - Fios / Colores - Alambres / Wires - Colors													
PR= Preto	***MR = Marrom***	***AZ = Azul***	***CZ = Cinza***	***VD= Verde***	***ORN= Laranja***	***PNK = Rosa***	***VL= Violeta***	***VM = Vermelho***	***TAN= Beje***	***BR = Branco***	***AM= Amarelo***	***LT = Claro***	***DK = Escuro***
Negro / Black	*Marrón / Brown*	*Azul / Blue*	*Gris / Gray*	*Verde / Green*	*Naranja /Orange*	*Rosa / Pink*	*Violeta / Purple*	*Rojo / Red*	*Beije / Tan*	*Blanco / White*	*Amarillo / Yellow*	*Claro / Light*	*Oscuro / Dark*

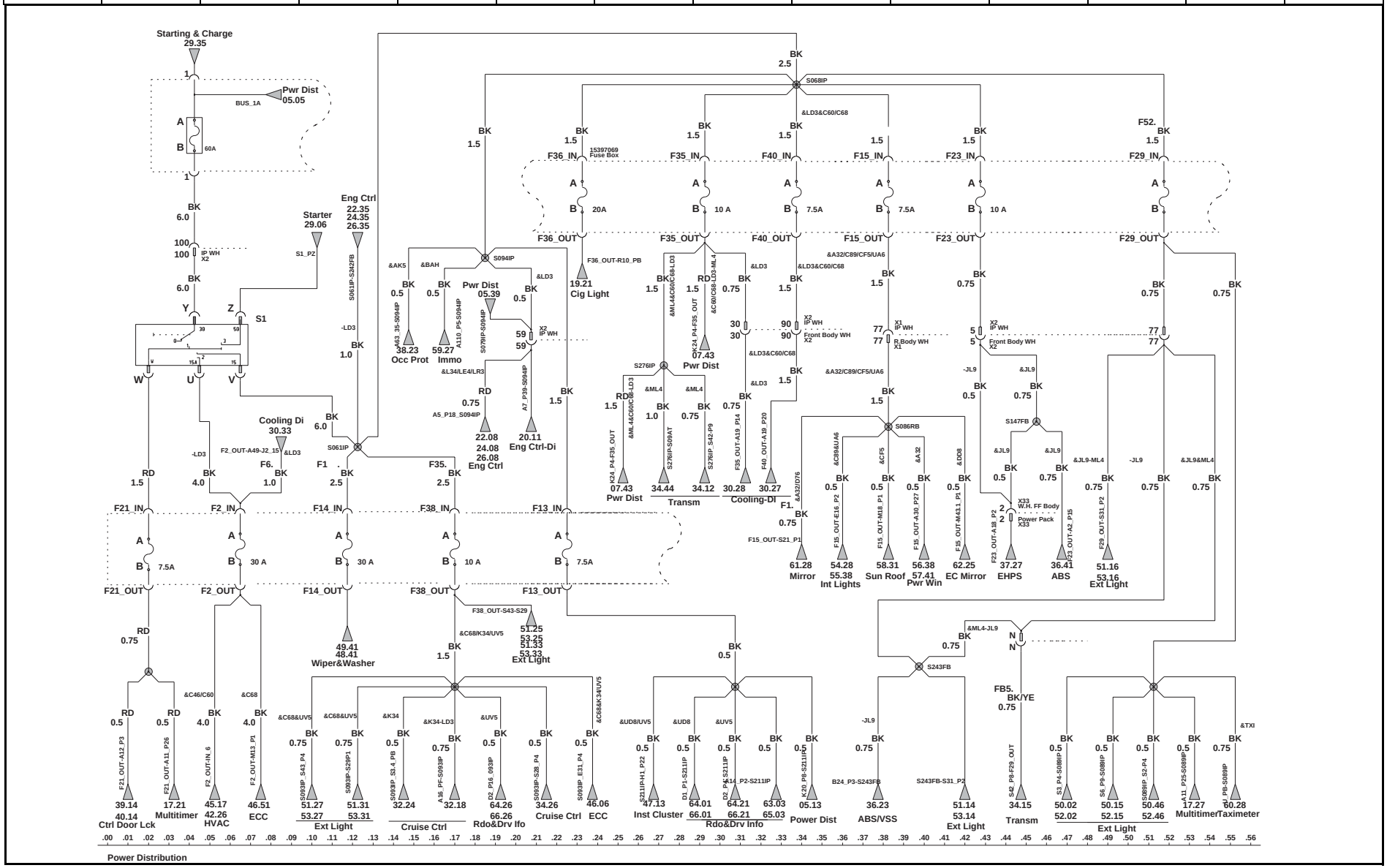

Cores - Fios / Colores - Alambres / Wires - Colors													
PR= Preto	*MR = Marrom*	*AZ = Azul*	*CZ = Cinza*	*VD= Verde*	*ORN= Laranja*	*PNK = Rosa*	*VL= Violeta*	*VM = Vermelho*	*TAN= Beje*	*BR = Branco*	*AM= Amarelo*	*LT = Claro*	*DK = Escuro*
Negro / Black	*Marrón / Brown*	*Azul / Blue*	*Gris / Gray*	*Verde / Green*	*Naranja /Orange*	*Rosa / Pink*	*Violeta / Purple*	*Rojo / Red*	*Beije / Tan*	*Blanco / White*	*Amarelo / Yellow*	*Claro / Light*	*Oscuro / Dark*

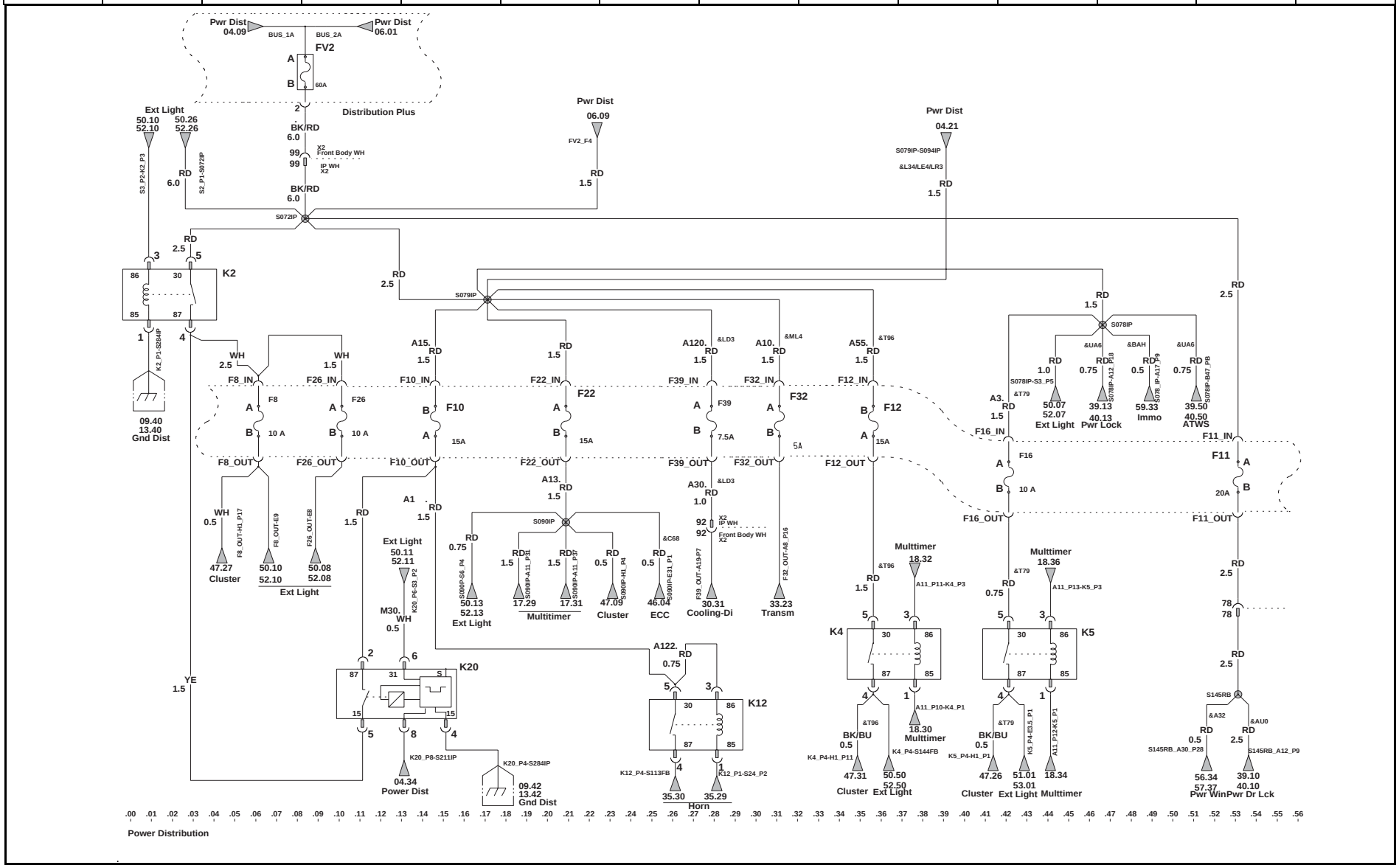

Cores - Fios / Colores - Alambres / Wires - Colors													
PR= Preto Negro / Black	MR = Marrom Marrón / Brown	AZ = Azul Azul / Blue	CZ = Cinza Gris / Gray	VD= Verde Verde / Green	*ORN= Laranja* Naranja /Orange	*PNK = Rosa* Rosa / Pink	*VL= Violeta* Violeta / Purple	*VM = Vermelho* Rojo / Red	*TAN= Beje* Beije / Tan	*BR = Branco* Blanco / White	*AM= Amarelo* Amarillo / Yellow	*LT = Claro* Claro / Light	*DK = Escuro* Oscuro / Dark

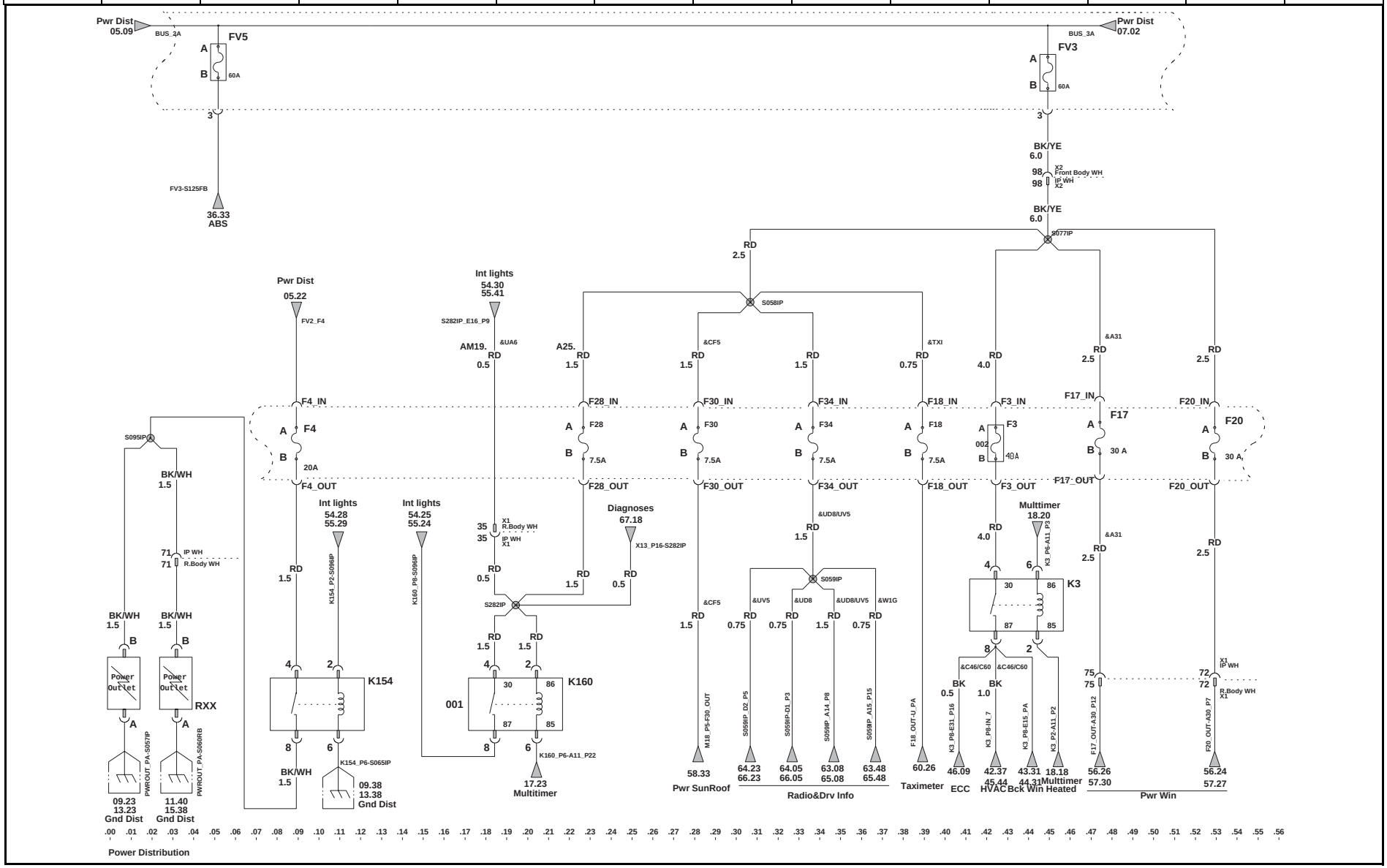

Cores - Fios / Colores - Alambres / Wires - Colors												
PR= Preto Negro / Black	MR = Marrom Marrón / Brown	AZ = Azul Azul / Blue	CZ = Cinza Gris / Gray	VD= Verde Verde / Green	*ORN= Laranja* Naranja /Orange	*PNK = Rosa* Rosa / Pink	*VL= Violeta* Violeta / Purple	*VM = Vermelho* Rojo / Red	*TAN= Beje* Beije / Tan	*BR = Branco* Blanco / White	*AM= Amarelo* Amarillo / Yellow	*LT = Claro* Claro / Light	*DK = Escuro* Oscuro / Dark

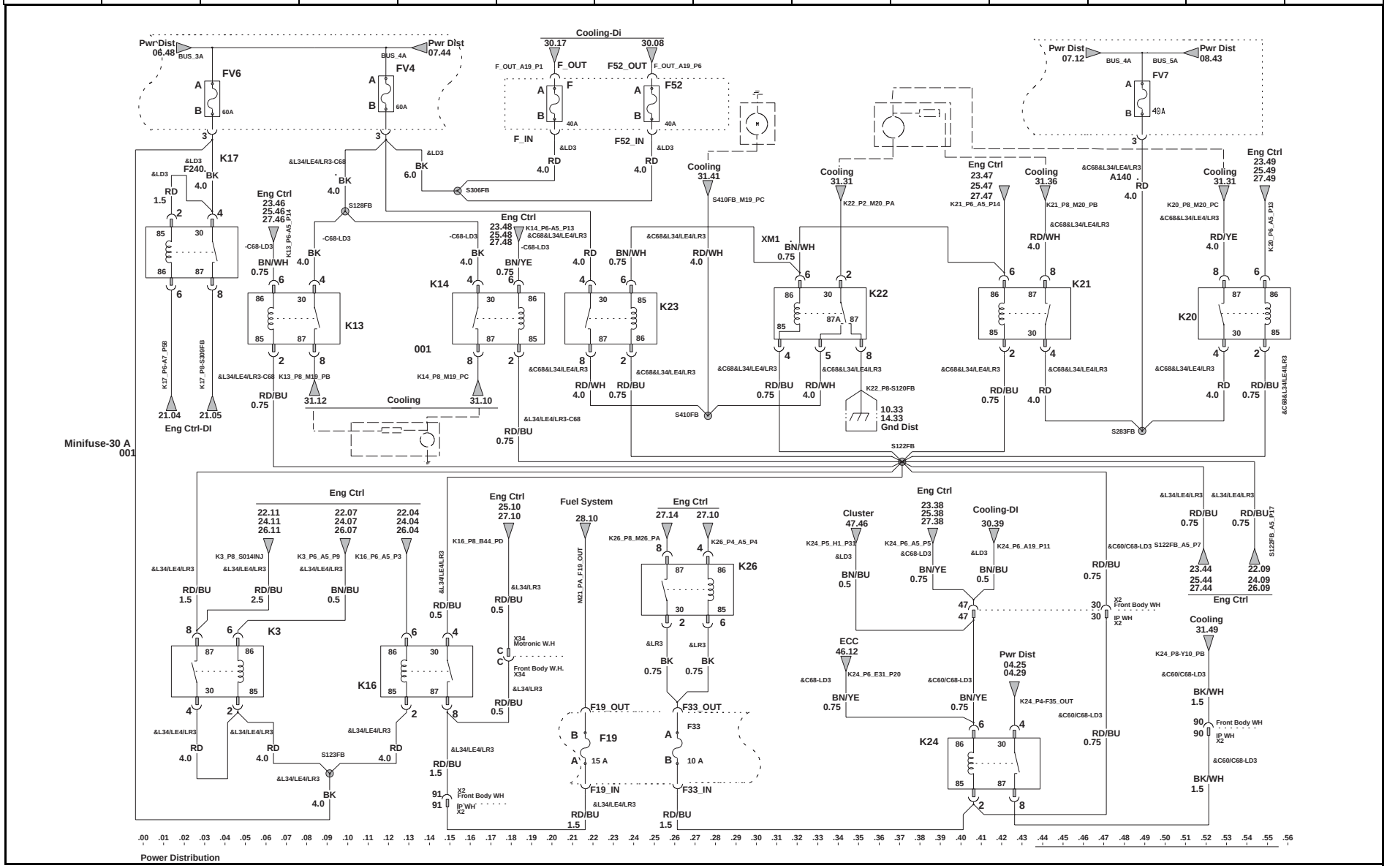

Cores - Fios / Colores - Alambres / Wires - Colors													
PR= Preto	MR = Marrom	AZ = Azul	CZ = Cinza	VD= Verde	*ORN= Laranja*	*PNK = Rosa*	*VL= Violeta*	*VM = Vermelho*	*TAN= Beje*	*BR = Branco*	*AM= Amarelo*	*LT = Claro*	*DK = Escuro*
Negro / Black	*Marrón / Brown*	*Azul / Blue*	*Gris / Gray*	*Verde / Green*	*Naranja /Orange*	*Rosa / Pink*	*Violeta / Purple*	*Rojo / Red*	*Beije / Tan*	*Blanco / White*	*Amarillo / Yellow*	*Claro / Light*	*Oscuro / Dark*

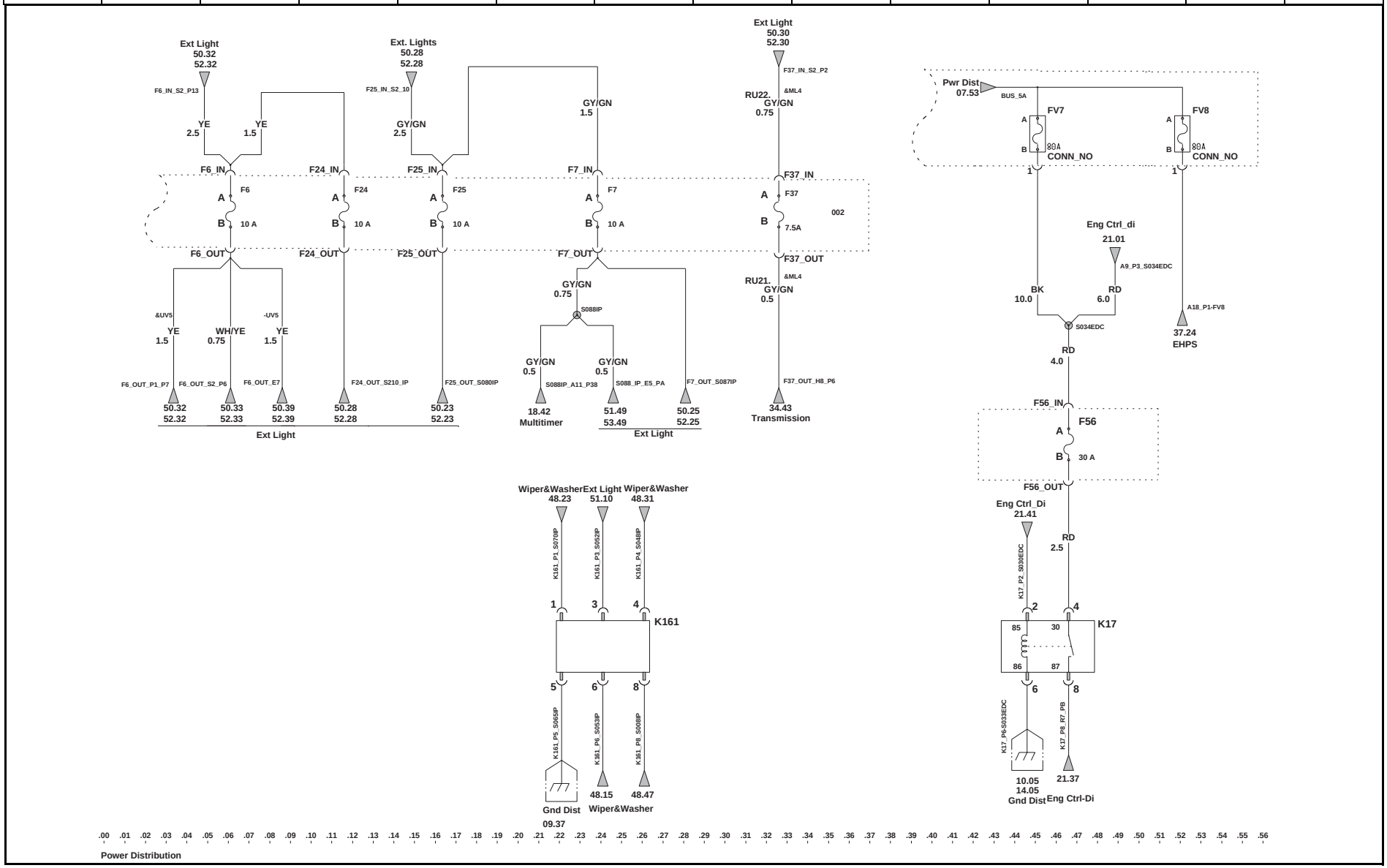

Cores - Fios / Colores - Alambres / Wires - Colors													
PR= Preto	***MR = Marrom***	***AZ = Azul***	***CZ = Cinza***	***VD= Verde***	***ORN= Laranja***	***PNK = Rosa***	***VL= Violeta***	***VM = Vermelho***	***TAN= Beje***	***BR = Branco***	***AM= Amarelo***	***LT = Claro***	***DK = Escuro***
Negro / Black	*Marrón / Brown*	*Azul / Blue*	*Gris / Gray*	*Verde / Green*	*Naranja /Orange*	*Rosa / Pink*	*Violeta / Purple*	*Rojo / Red*	*Beije / Tan*	*Blanco / White*	*Amarillo / Yellow*	*Claro / Light*	*Oscuro / Dark*

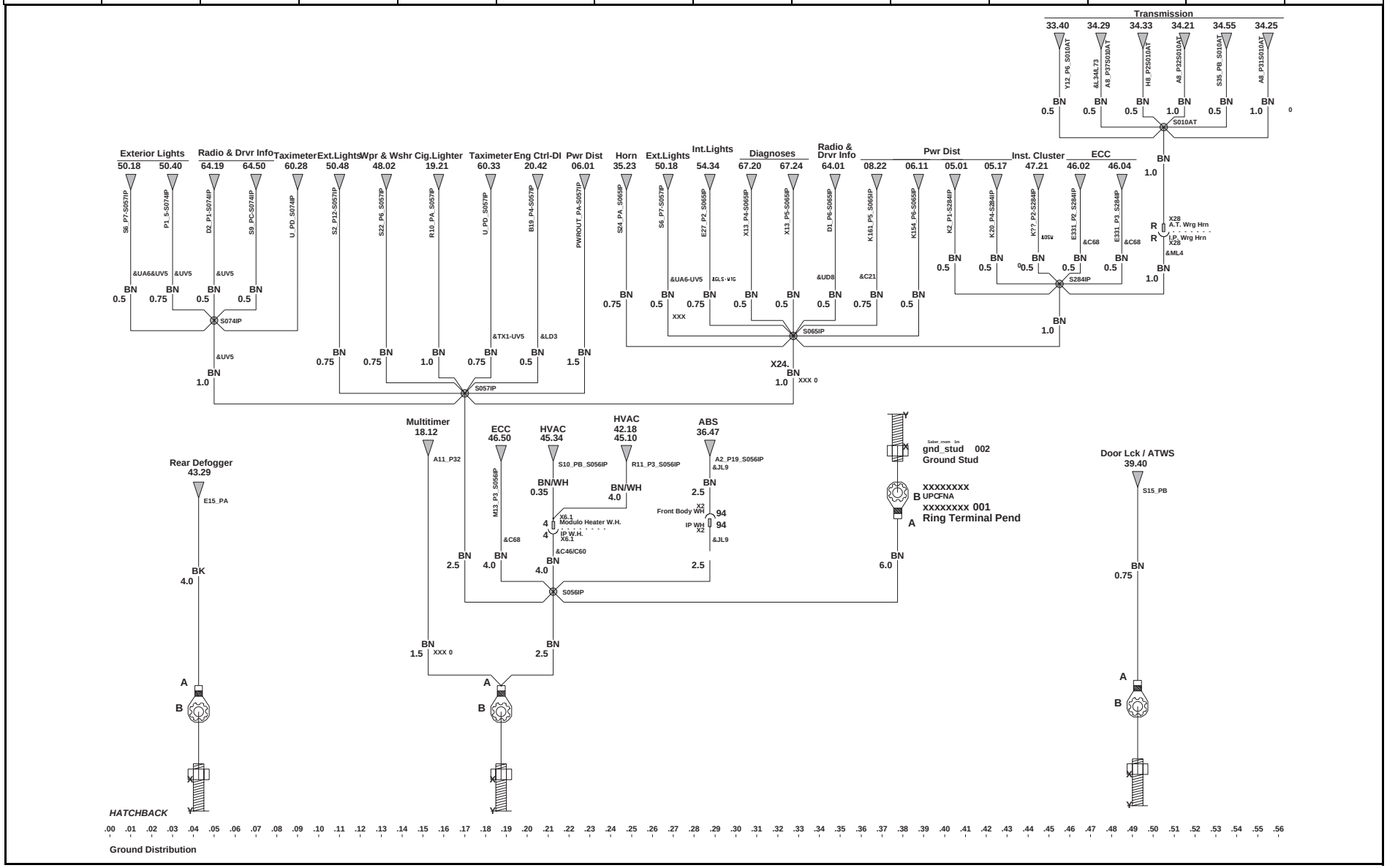

Cores - Fios / Colores - Alambres / Wires - Colors													
PR= Preto	*MR = Marrom*	*AZ = Azul*	*CZ = Cinza*	*VD= Verde*	*ORN= Laranja*	*PNK = Rosa*	*VL= Violeta*	*VM = Vermelho*	*TAN= Beje*	*BR = Branco*	*AM= Amarelo*	*LT = Claro*	*DK = Escuro*
Negro / Black	Marrón / Brown	Azul / Blue	Gris / Gray	Verde / Green	Naranja /Orange	Rosa / Pink	Violeta / Purple	Rojo / Red	Beije / Tan	Blanco / White	Amarillo / Yellow	Claro / Light	Oscuro / Dark

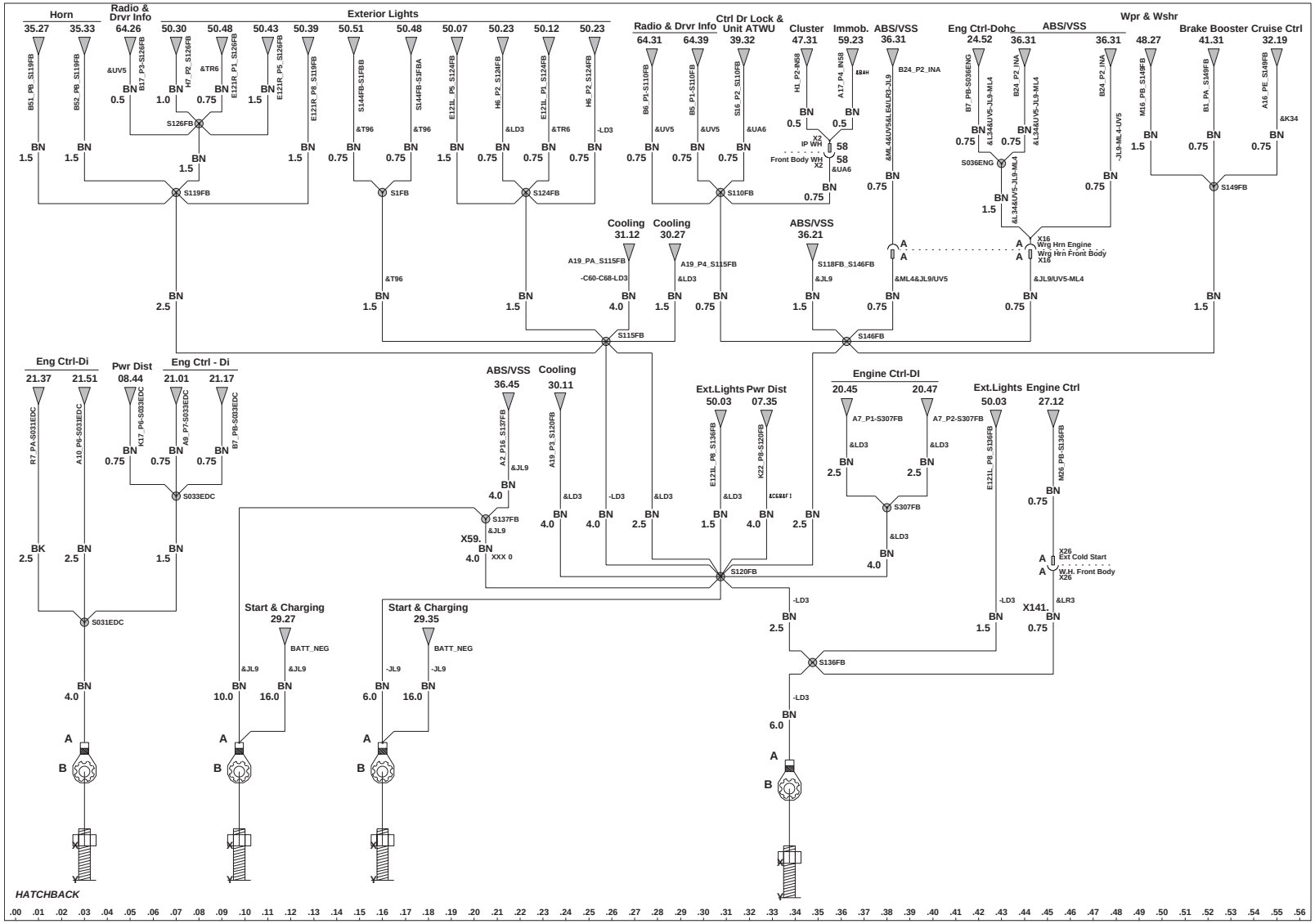

Cores - Fios / Colores - Alambres / Wires - Colors													
PR= Preto	MR = Marrom	AZ = Azul	CZ = Cinza	VD= Verde	*ORN= Laranja*	*PNK = Rosa*	*VL= Violeta*	*VM = Vermelho*	*TAN= Beje*	*BR = Branco*	*AM= Amarelo*	*LT = Claro*	*DK = Escuro*
Negro / Black	*Marrón / Brown*	*Azul / Blue*	*Gris / Gray*	*Verde / Green*	*Naranja /Orange*	*Rosa / Pink*	*Violeta / Purple*	*Rojo / Red*	*Beije / Tan*	*Blanco / White*	*Amarillo / Yellow*	*Claro / Light*	*Oscuro / Dark*

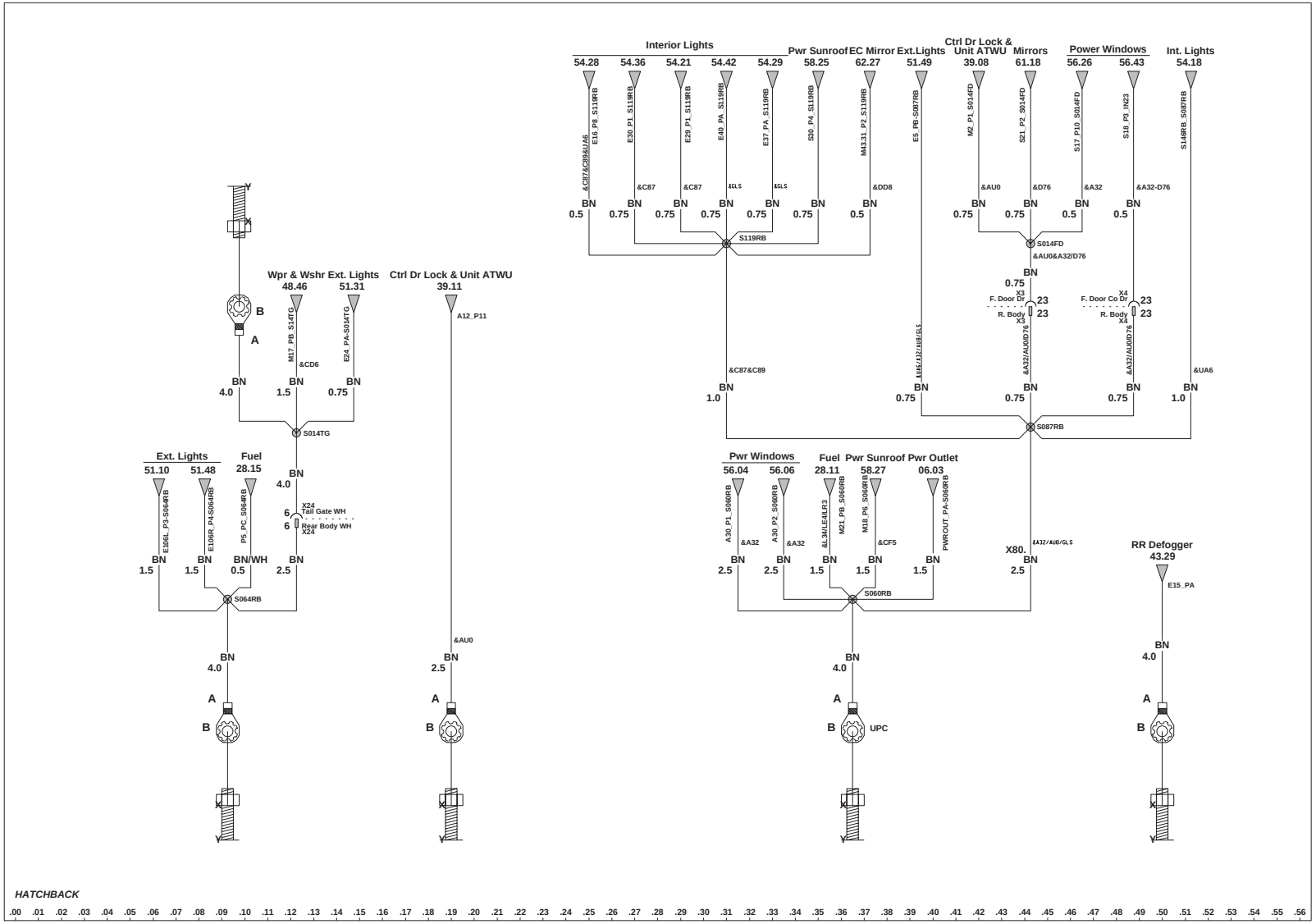

Ground Distribution

Cores - Fios / Colores - Alambres / Wires - Colors													
PR= Preto	**MR = Marrom**	**AZ = Azul**	**CZ = Cinza**	**VD= Verde**	***ORN= Laranja***	***PNK = Rosa***	***VL= Violeta***	***VM = Vermelho***	***TAN= Beje***	***BR = Branco***	***AM= Amarelo***	***LT = Claro***	***DK = Escuro***
Negro / Black	*Marrón / Brown*	*Azul / Blue*	*Gris / Gray*	*Verde / Green*	*Naranja /Orange*	*Rosa / Pink*	*Violeta / Purple*	*Rojo / Red*	*Beije / Tan*	*Blanco / White*	*Amarillo / Yellow*	*Claro / Light*	*Oscuro / Dark*

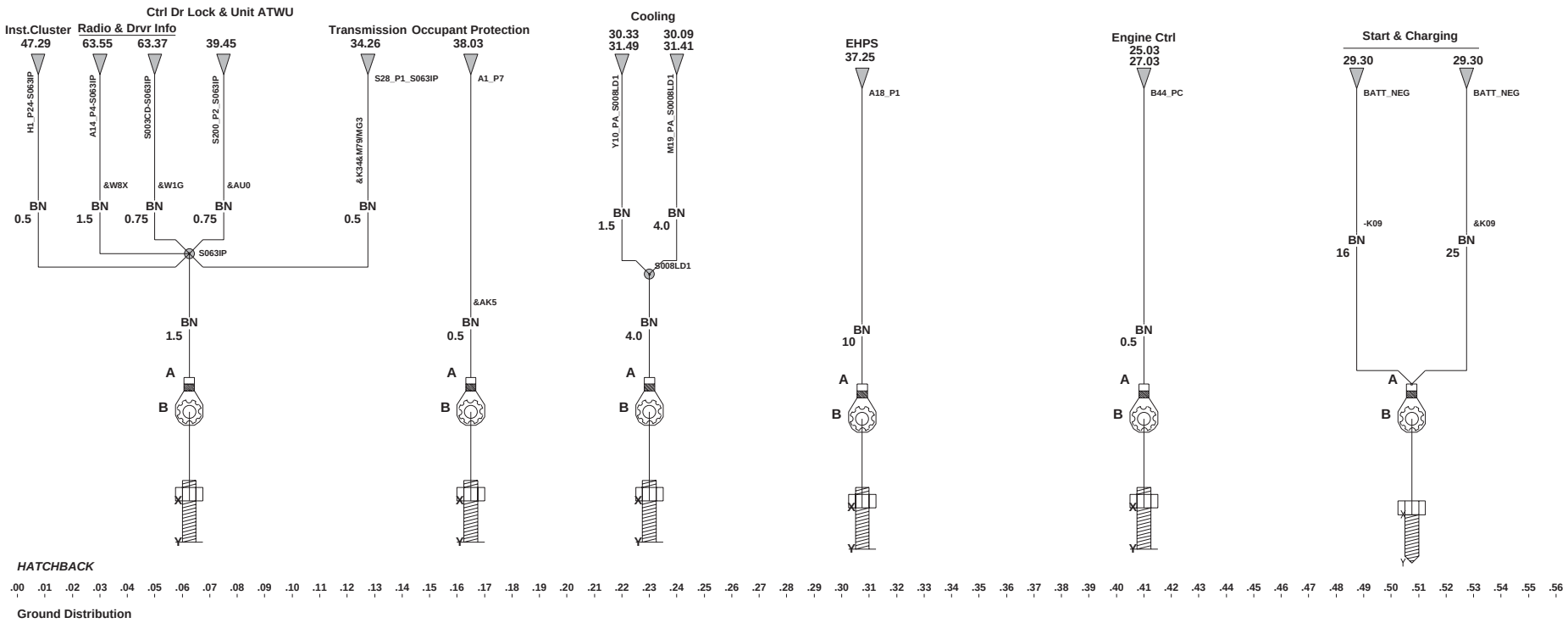

Cores - Fios / Colores - Alambres / Wires - Colors													
PR= Preto	*MR = Marrom*	*AZ = Azul*	*CZ = Cinza*	*VD= Verde*	*ORN= Laranja*	*PNK = Rosa*	*VL= Violeta*	*VM = Vermelho*	*TAN= Beje*	*BR = Branco*	*AM= Amarelo*	*LT = Claro*	*DK = Escuro*
Negro / Black	*Marrón / Brown*	*Azul / Blue*	*Gris / Gray*	*Verde / Green*	*Naranja /Orange*	*Rosa / Pink*	*Violeta / Purple*	*Rojo / Red*	*Beije / Tan*	*Blanco / White*	*Amarillo / Yellow*	*Claro / Light*	*Oscuro / Dark*

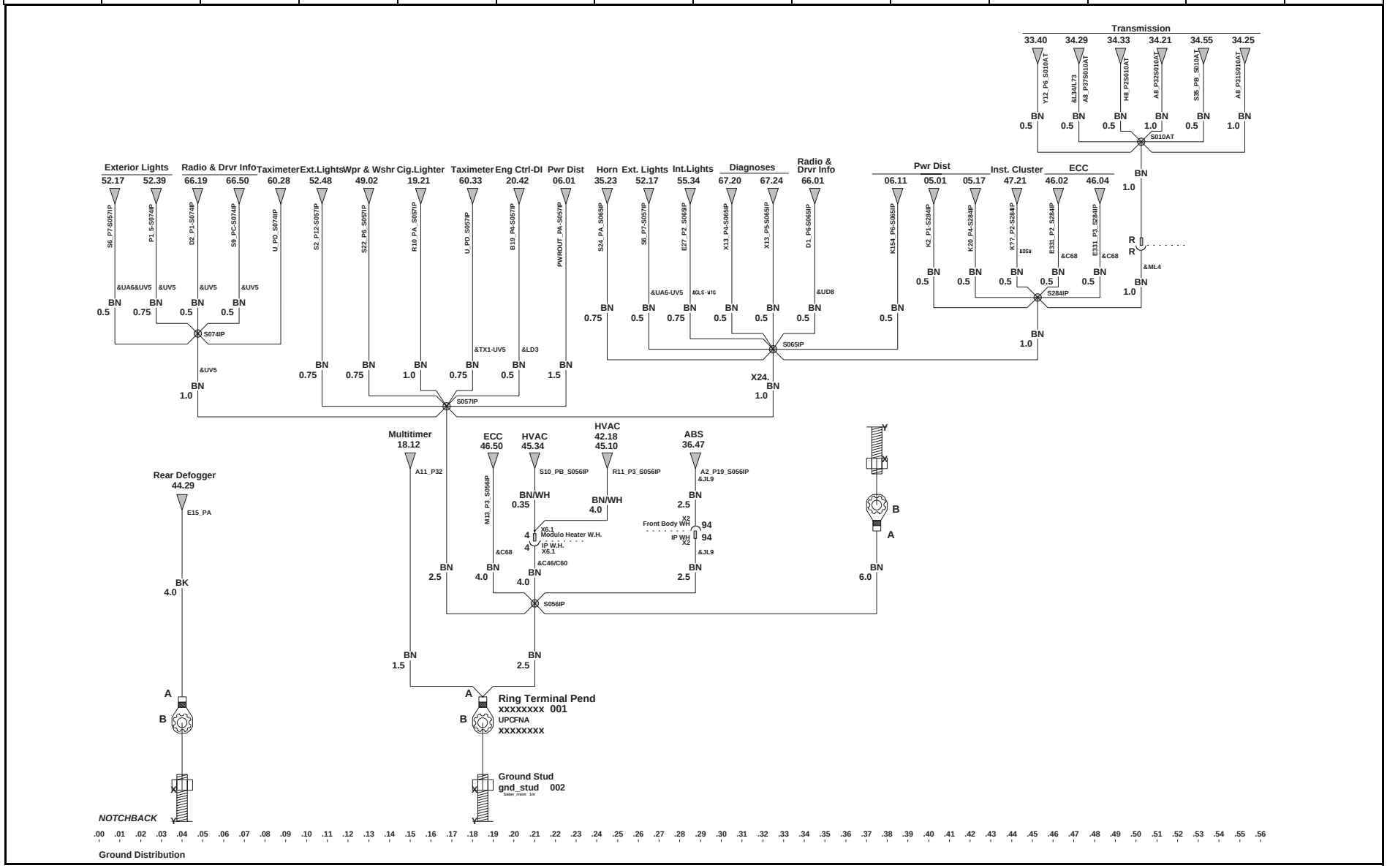

Cores - Fios / Colores - Alambres / Wires - Colors													
PR= Preto	*MR = Marrom*	*AZ = Azul*	*CZ = Cinza*	*VD= Verde*	*ORN= Laranja*	*PNK = Rosa*	*VL= Violeta*	*VM = Vermelho*	*TAN= Beje*	*BR = Branco*	*AM= Amarelo*	*LT = Claro*	*DK = Escuro*
Negro / Black	*Marrón / Brown*	*Azul / Blue*	*Gris / Gray*	*Verde / Green*	*Naranja /Orange*	*Rosa / Pink*	*Violeta / Purple*	*Rojo / Red*	*Beije / Tan*	*Blanco / White*	*Amarillo / Yellow*	*Claro / Light*	*Oscuro / Dark*

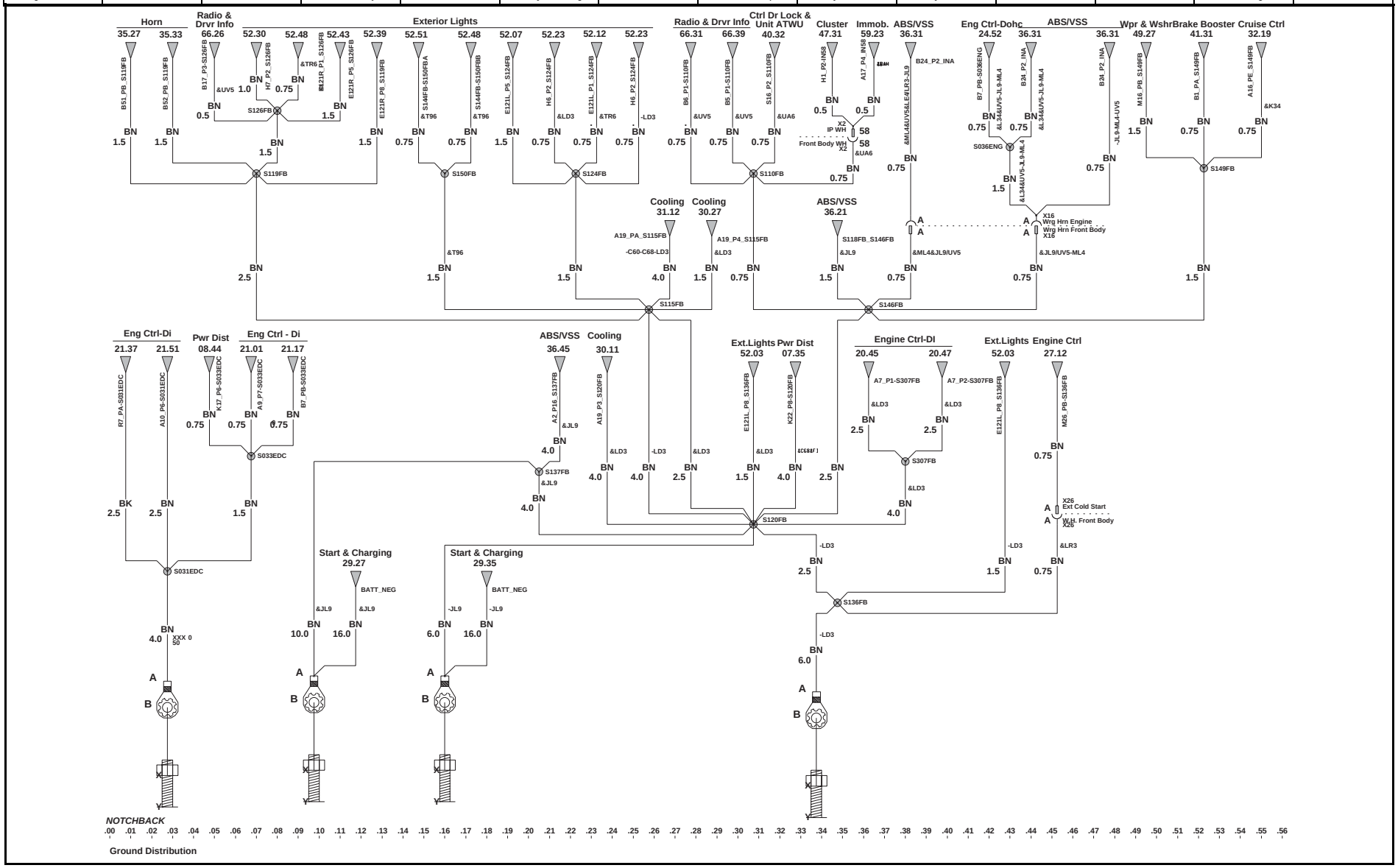

Cores - Fios / Colores - Alambres / Wires - Colors													
PR= Preto	MR = Marrom	AZ = Azul	CZ = Cinza	VD= Verde	*ORN= Laranja*	*PNK = Rosa*	*VL= Violeta*	*VM = Vermelho*	*TAN= Beje*	*BR = Branco*	*AM= Amarelo*	*LT = Claro*	*DK = Escuro*
Negro / Black	*Marrón / Brown*	*Azul / Blue*	*Gris / Gray*	*Verde / Green*	*Naranja /Orange*	*Rosa / Pink*	*Violeta / Purple*	*Rojo / Red*	*Beije / Tan*	*Blanco / White*	*Amarillo / Yellow*	*Claro / Light*	*Oscuro / Dark*

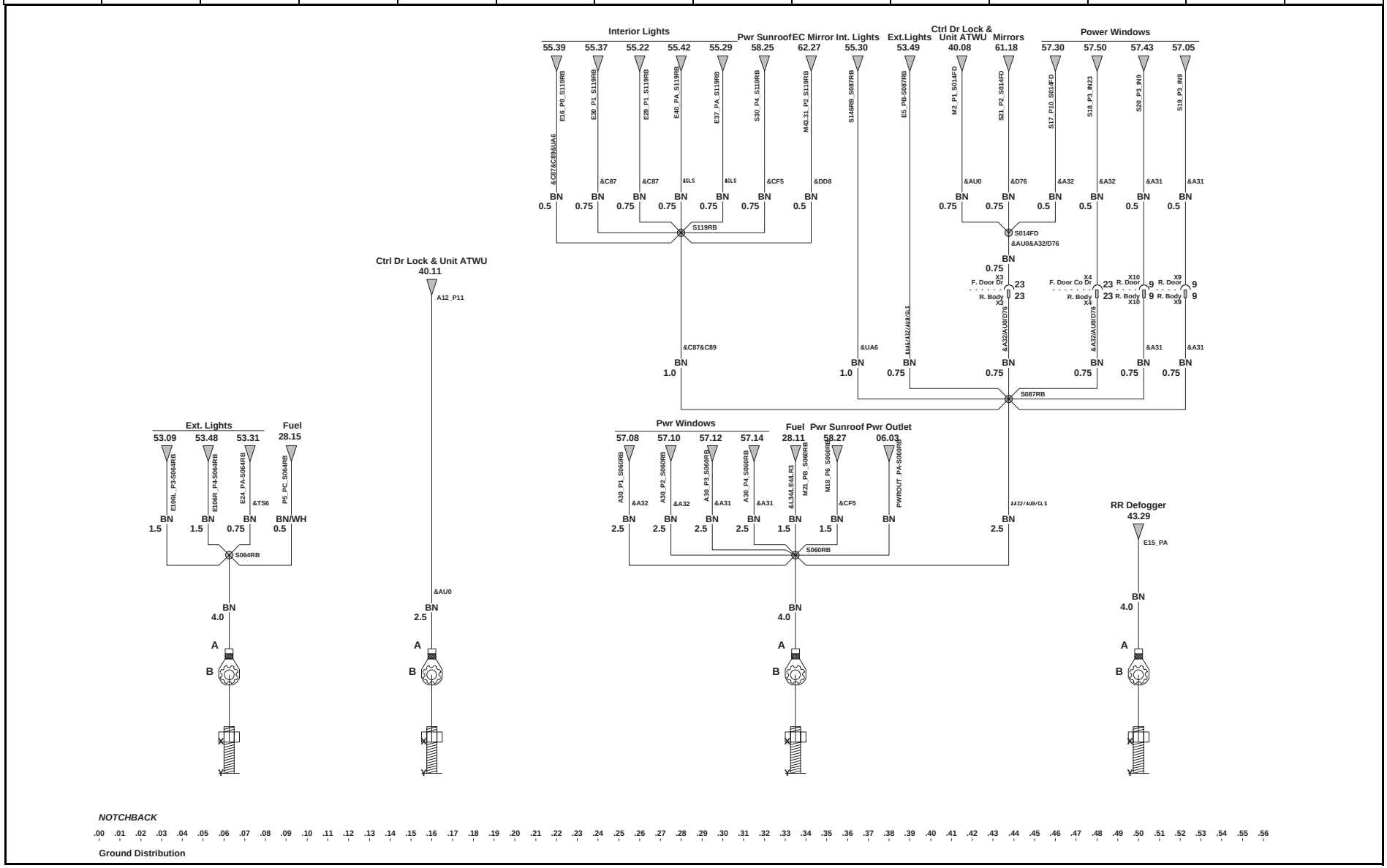

Cores - Fios / Colores - Alambres / Wires - Colors													
PR= Preto	MR = Marrom	AZ = Azul	CZ = Cinza	VD= Verde	*ORN= Laranja*	*PNK = Rosa*	*VL= Violeta*	*VM = Vermelho*	*TAN= Beje*	*BR = Branco*	*AM= Amarelo*	*LT = Claro*	*DK = Escuro*
Negro / Black	*Marrón / Brown*	*Azul / Blue*	*Gris / Gray*	*Verde / Green*	*Naranja /Orange*	*Rosa / Pink*	*Violeta / Purple*	*Rojo / Red*	*Beije / Tan*	*Blanco / White*	*Amarillo / Yellow*	*Claro / Light*	*Oscuro / Dark*

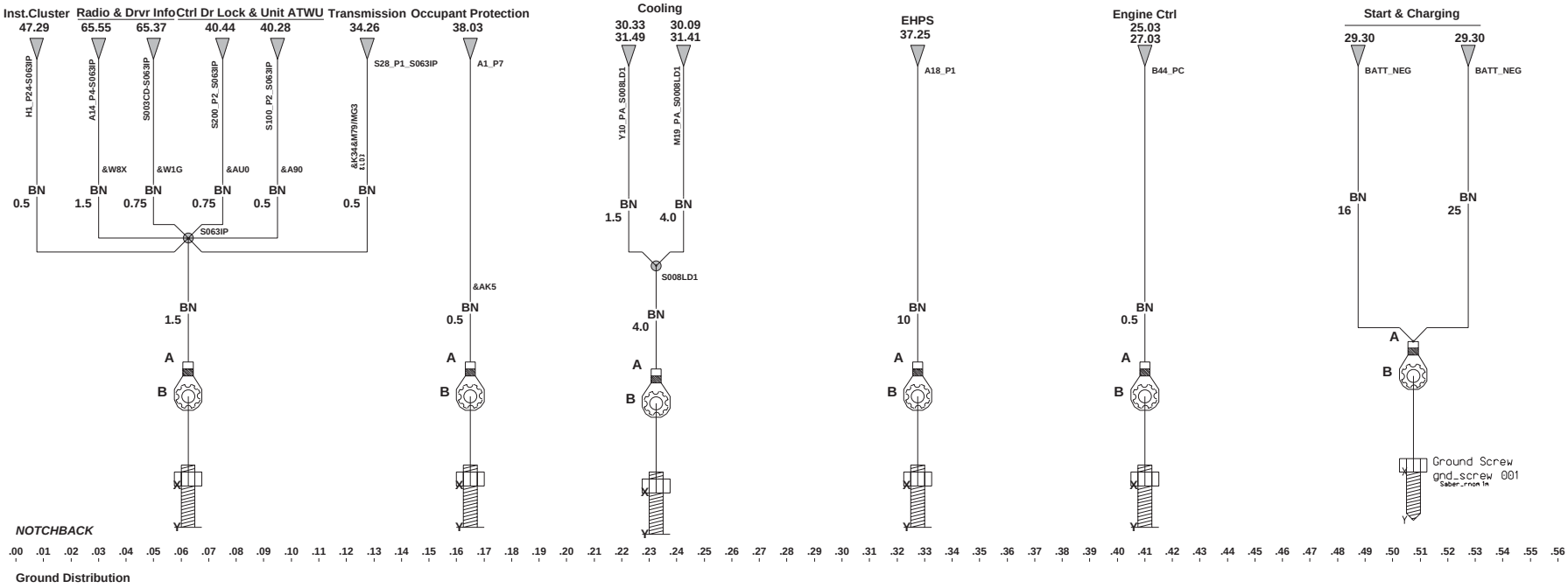

Cores - Fios / Colores - Alambres / Wires - Colors													
PR= Preto	MR = Marrom	AZ = Azul	CZ = Cinza	VD= Verde	*ORN= Laranja*	*PNK = Rosa*	*VL= Violeta*	*VM = Vermelho*	*TAN= Beje*	*BR = Branco*	*AM= Amarelo*	*LT = Claro*	*DK = Escuro*
Negro / Black	*Marrón / Brown*	*Azul / Blue*	*Gris / Gray*	*Verde / Green*	*Naranja /Orange*	*Rosa / Pink*	*Violeta / Purple*	*Rojo / Red*	*Beije / Tan*	*Blanco / White*	*Amarillo / Yellow*	*Claro / Light*	*Oscuro / Dark*

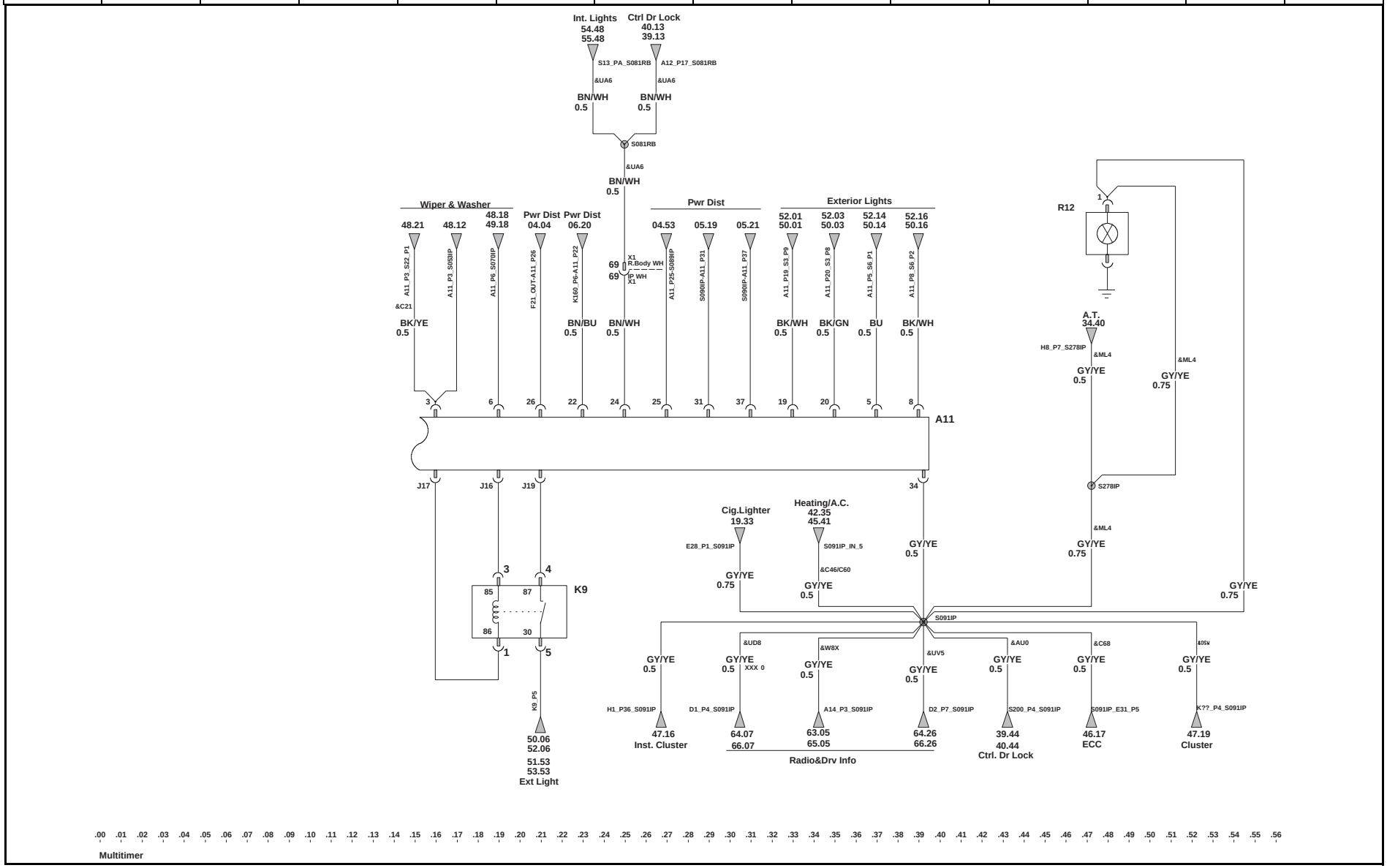

Cores - Fios / Colores - Alambres / Wires - Colors												
PR= Preto Negro / Black	MR = Marrom Marrón / Brown	AZ = Azul Azul / Blue	CZ = Cinza Gris / Gray	VD= Verde Verde / Green	*ORN= Laranja* Naranja /Orange	*PNK = Rosa* Rosa / Pink	*VL= Violeta* Violeta / Purple	*VM = Vermelho* Rojo / Red	*TAN= Beje* Beije / Tan	*BR = Branco* Blanco / White	*AM= Amarelo* Amarillo / Yellow	*LT = Claro* Claro / Light	*DK = Escuro* Oscuro / Dark

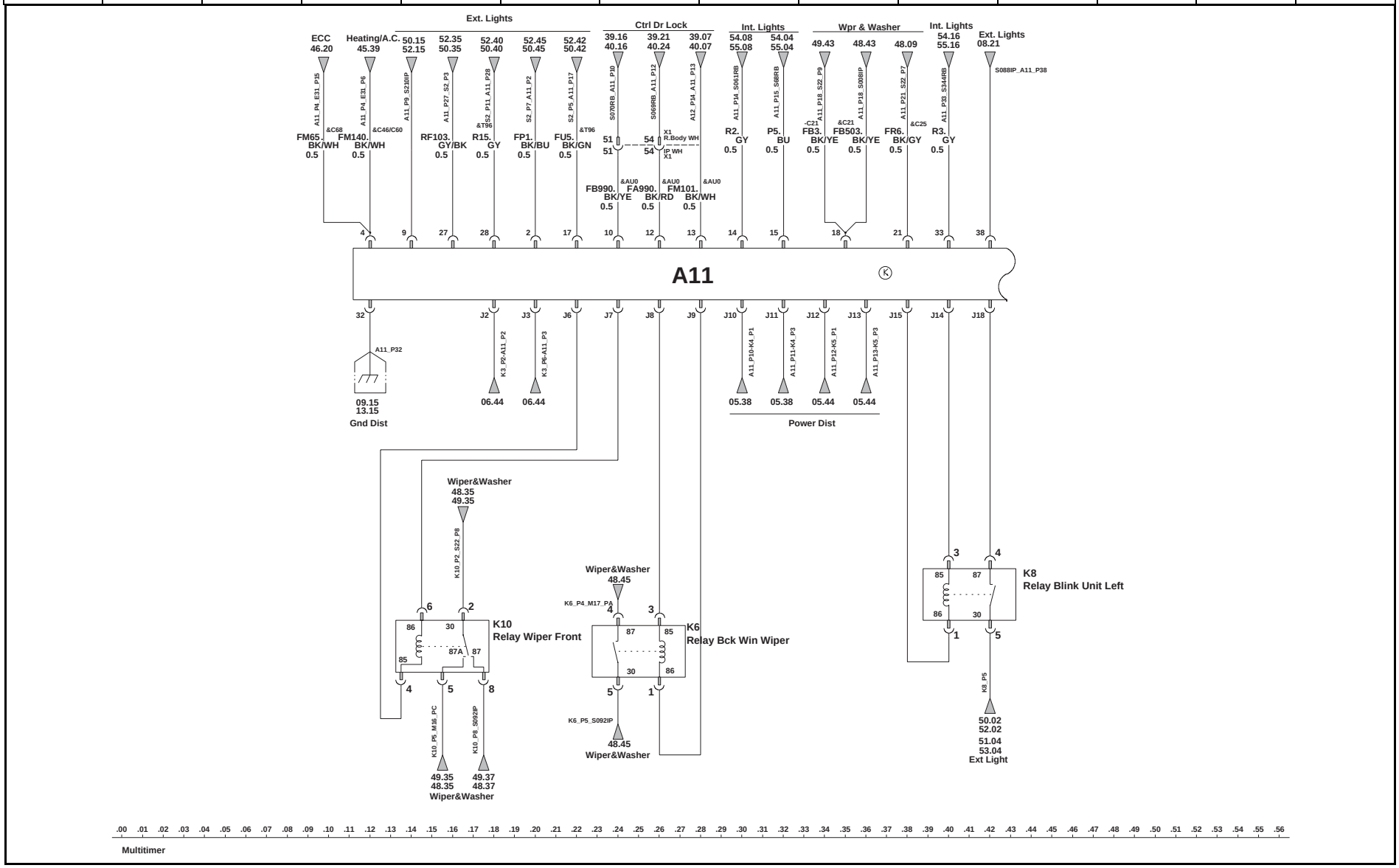

Cores - Fios / Colores - Alambres / Wires - Colors													
PR= Preto *Negro / Black*	**MR = Marrom** *Marrón / Brown*	**AZ = Azul** *Azul / Blue*	**CZ = Cinza** *Gris / Gray*	**VD= Verde** *Verde / Green*	***ORN= Laranja*** *Naranja /Orange*	***PNK = Rosa*** *Rosa / Pink*	***VL= Violeta*** *Violeta / Purple*	***VM = Vermelho*** *Rojo / Red*	***TAN= Beje*** *Beije / Tan*	***BR = Branco*** *Blanco / White*	***AM= Amarelo*** *Amarillo / Yellow*	***LT = Claro*** *Claro / Light*	***DK = Escuro*** *Oscuro / Dark*

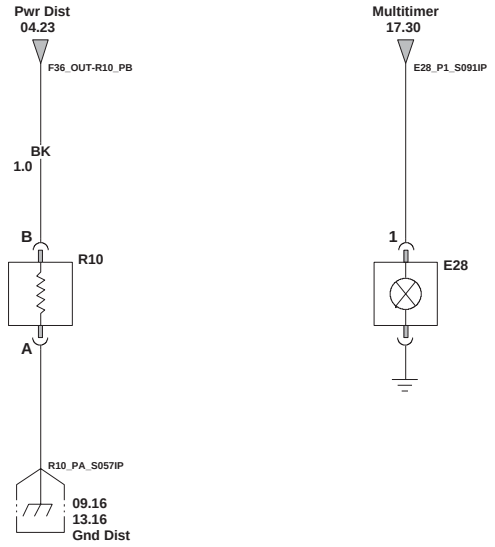

.00 .01 .02 .03 .04 .05 .06 .07 .08 .09 .10 .11 .12 .13 .14 .15 .16 .17 .18 .19 .20 .21 .22 .23 .24 .25 .26 .27 .28 .29 .30 .31 .32 .33 .34 .35 .36 .37 .38 .39 .40 .41 .42 .43 .44 .45 .46 .47 .48 .49 .50 .51 .52 .53 .54 .55 .56

Cigarette Lighter

Cores - Fios / Colores - Alambres / Wires - Colors												
PR= Preto	MR = Marrom	AZ = Azul	CZ = Cinza	VD= Verde	*ORN= Laranja*	*PNK = Rosa*	*VL= Violeta*	*VM = Vermelho*	*TAN= Beje*	*BR = Branco*	*AM= Amarelo*	*LT = Claro*	*DK = Escuro*
Negro / Black	Marrón / Brown	Azul / Blue	Gris / Gray	Verde / Green	Naranja /Orange	Rosa / Pink	Violeta / Purple	Rojo / Red	Beije / Tan	Blanco / White	Amarillo / Yellow	Claro / Light	Oscuro / Dark

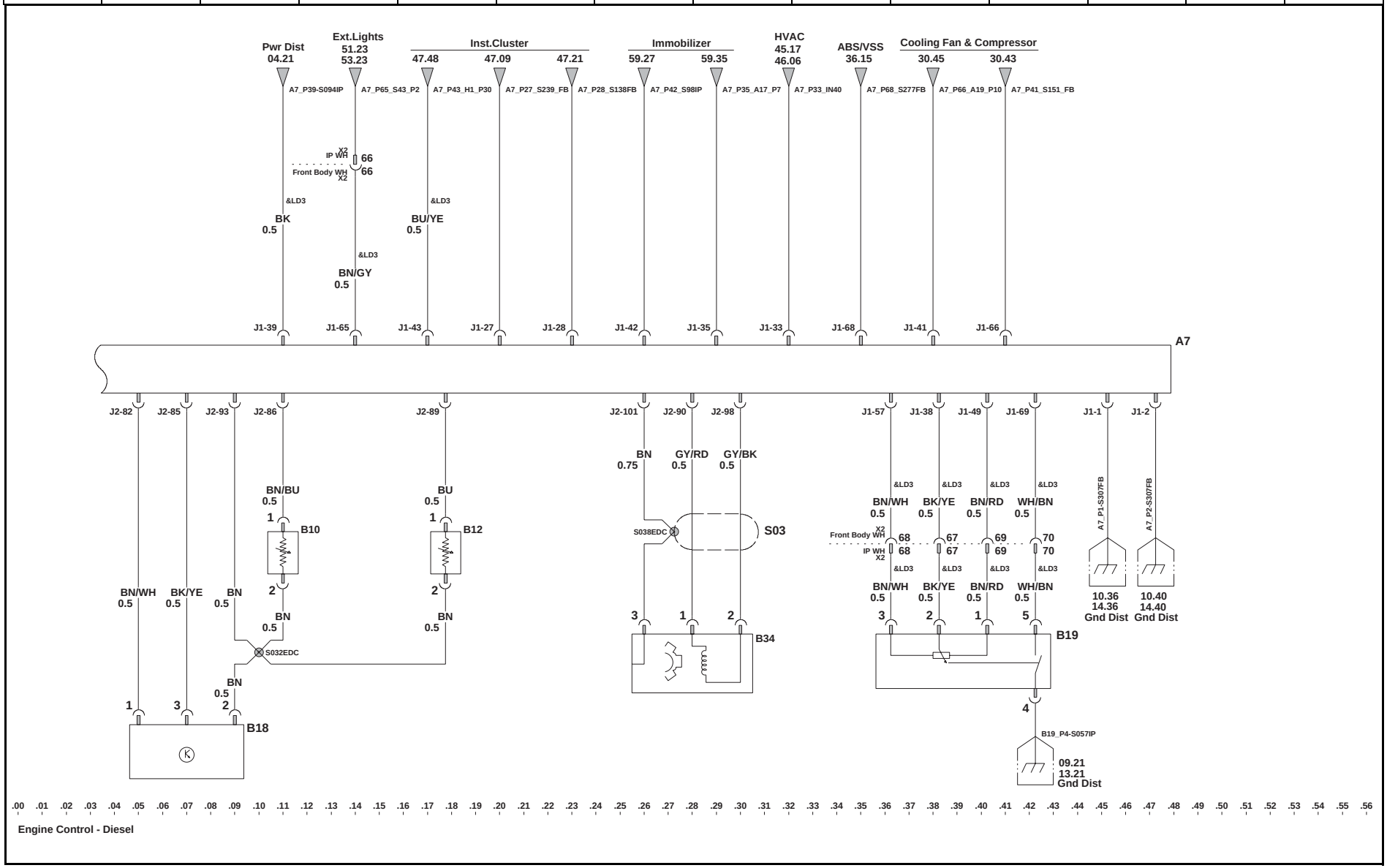

Cores - Fios / Colores - Alambres / Wires - Colors													
PR= Preto *Negro / Black*	**MR = Marrom** *Marrón / Brown*	**AZ = Azul** *Azul / Blue*	**CZ = Cinza** *Gris / Gray*	**VD= Verde** *Verde / Green*	***ORN= Laranja*** *Naranja /Orange*	***PNK = Rosa*** *Rosa / Pink*	***VL= Violeta*** *Violeta / Purple*	***VM = Vermelho*** *Rojo / Red*	***TAN= Beje*** *Beije / Tan*	***BR = Branco*** *Blanco / White*	***AM= Amarelo*** *Amarillo / Yellow*	***LT = Claro*** *Claro / Light*	***DK = Escuro*** *Oscuro / Dark*

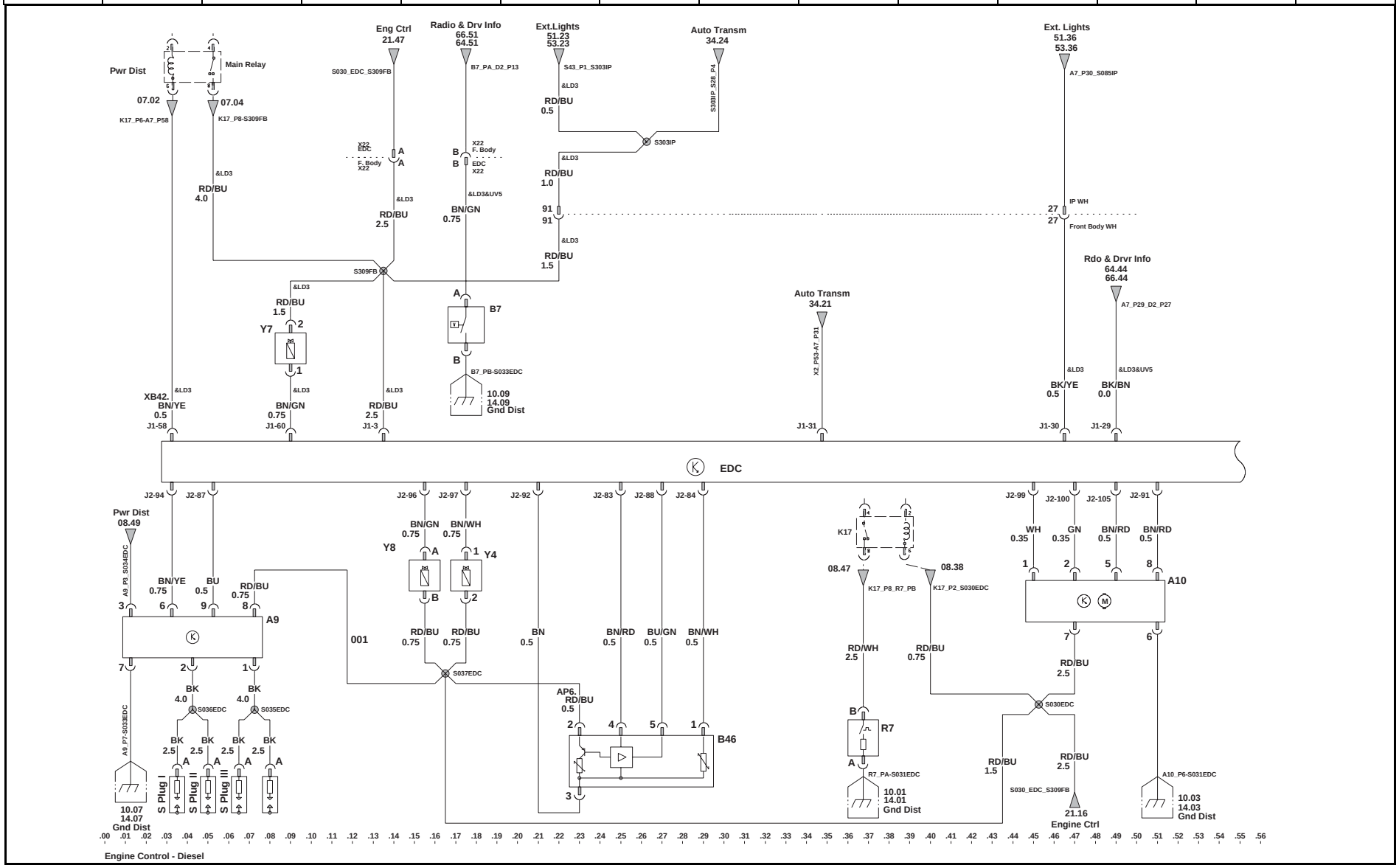

Cores - Fios / Colores - Alambres / Wires - Colors													
PR= Preto	*MR = Marrom*	*AZ = Azul*	*CZ = Cinza*	*VD= Verde*	*ORN= Laranja*	*PNK = Rosa*	*VL= Violeta*	*VM = Vermelho*	*TAN= Beje*	*BR = Branco*	*AM= Amarelo*	*LT = Claro*	*DK = Escuro*
Negro / Black	*Marrón / Brown*	*Azul / Blue*	*Gris / Gray*	*Verde / Green*	*Naranja /Orange*	*Rosa / Pink*	*Violeta / Purple*	*Rojo / Red*	*Beije / Tan*	*Blanco / White*	*Amarillo / Yellow*	*Claro / Light*	*Oscuro / Dark*

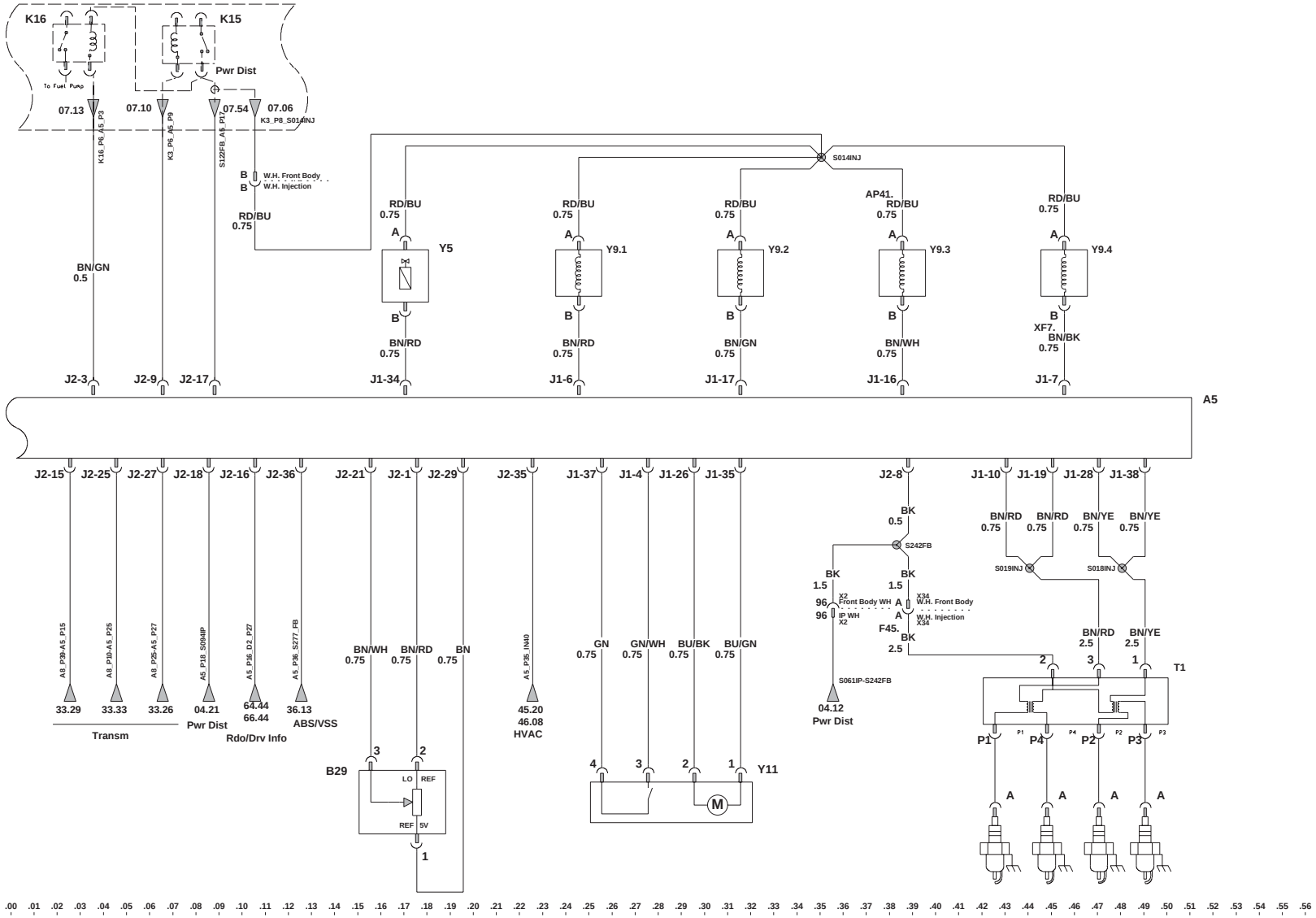

Engine Control 2.0 Sohc Gas

Cores - Fios / Colores - Alambres / Wires - Colors													
PR= Preto	MR = Marrom	AZ = Azul	CZ = Cinza	VD= Verde	*ORN= Laranja*	*PNK = Rosa*	*VL= Violeta*	*VM = Vermelho*	*TAN= Beje*	*BR = Branco*	*AM= Amarelo*	*LT = Claro*	*DK = Escuro*
Negro / Black	*Marrón / Brown*	*Azul / Blue*	*Gris / Gray*	*Verde / Green*	*Naranja /Orange*	*Rosa / Pink*	*Violeta / Purple*	*Rojo / Red*	*Beije / Tan*	*Blanco / White*	*Amarillo / Yellow*	*Claro / Light*	*Oscuro / Dark*

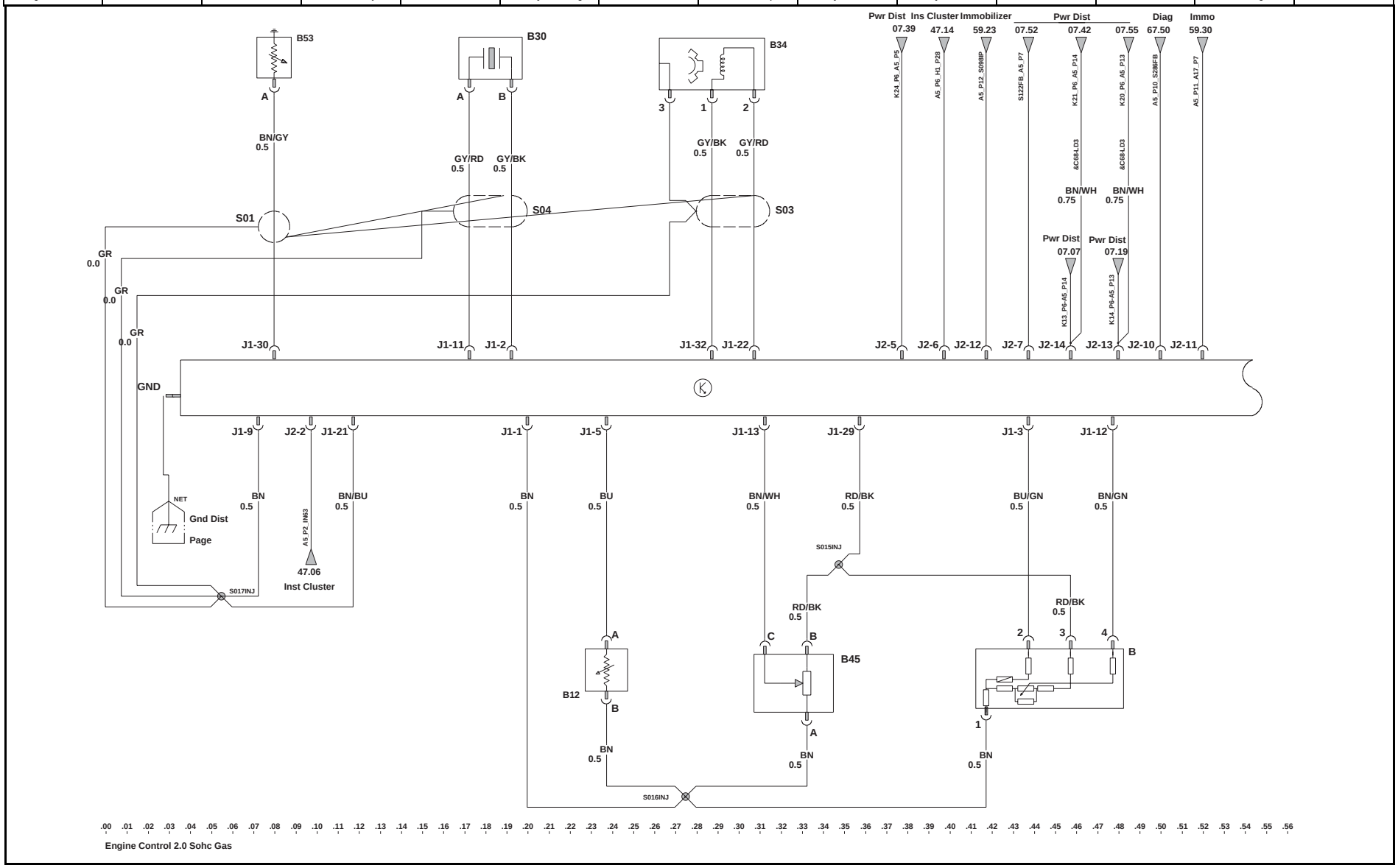

Cores - Fios / Colores - Alambres / Wires - Colors													
PR= Preto	*MR = Marrom*	*AZ = Azul*	*CZ = Cinza*	*VD= Verde*	*ORN= Laranja*	*PNK = Rosa*	*VL= Violeta*	*VM = Vermelho*	*TAN= Beje*	*BR = Branco*	*AM= Amarelo*	*LT = Claro*	*DK = Escuro*
Negro / Black	Marrón / Brown	Azul / Blue	Gris / Gray	Verde / Green	Naranja /Orange	Rosa / Pink	Violeta / Purple	Rojo / Red	Beije / Tan	Blanco / White	Amarillo / Yellow	Claro / Light	Oscuro / Dark

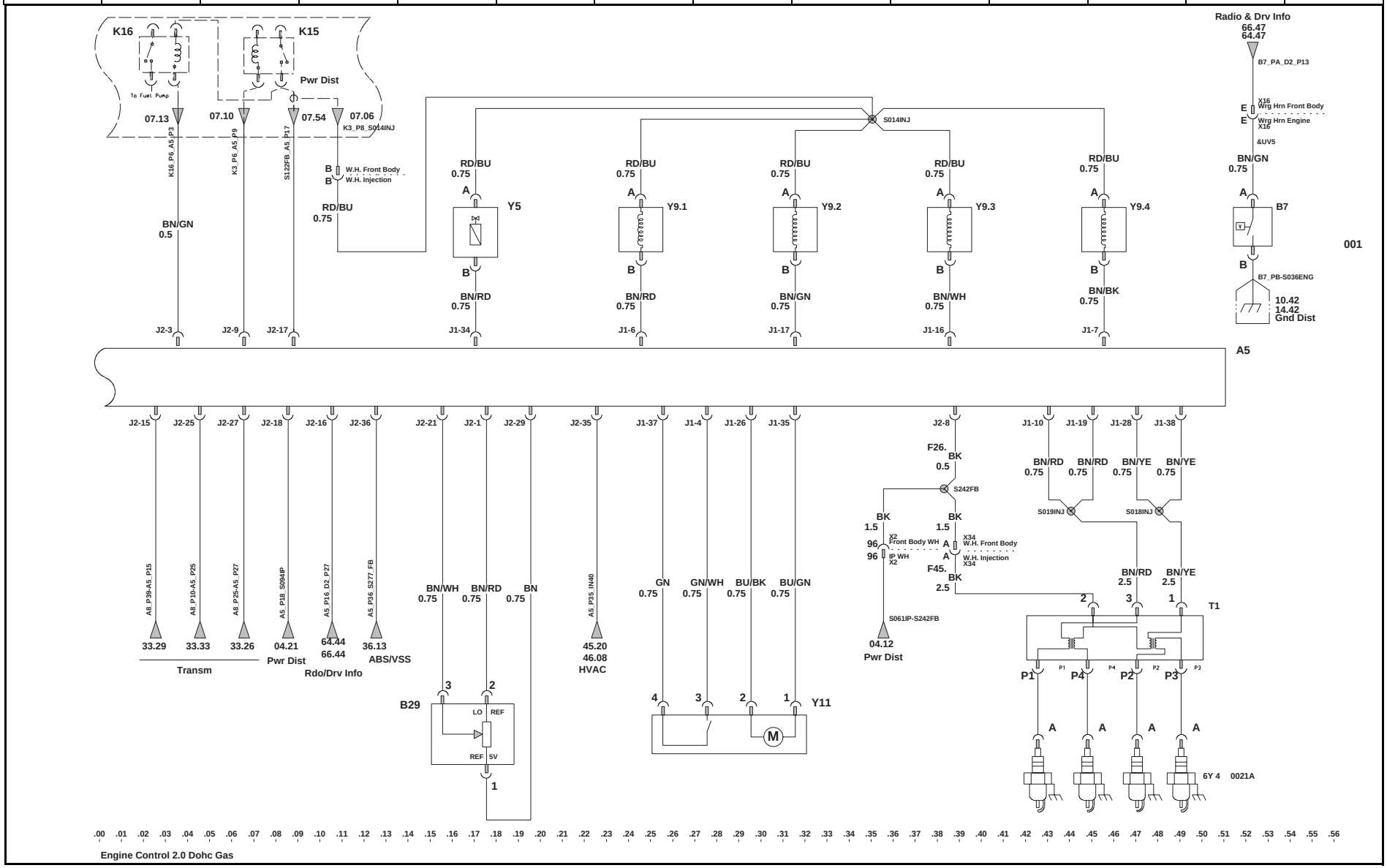

Cores - Fios / Colores - Alambres / Wires - Colors													
PR= Preto	MR = Marrom	AZ = Azul	CZ = Cinza	VD= Verde	*ORN= Laranja*	*PNK = Rosa*	*VL= Violeta*	*VM = Vermelho*	*TAN= Beje*	*BR = Branco*	*AM= Amarelo*	*LT = Claro*	*DK = Escuro*
Negro / Black	*Marrón / Brown*	*Azul / Blue*	*Gris / Gray*	*Verde / Green*	*Naranja /Orange*	*Rosa / Pink*	*Violeta / Purple*	*Rojo / Red*	*Beije / Tan*	*Blanco / White*	*Amarillo / Yellow*	*Claro / Light*	*Oscuro / Dark*

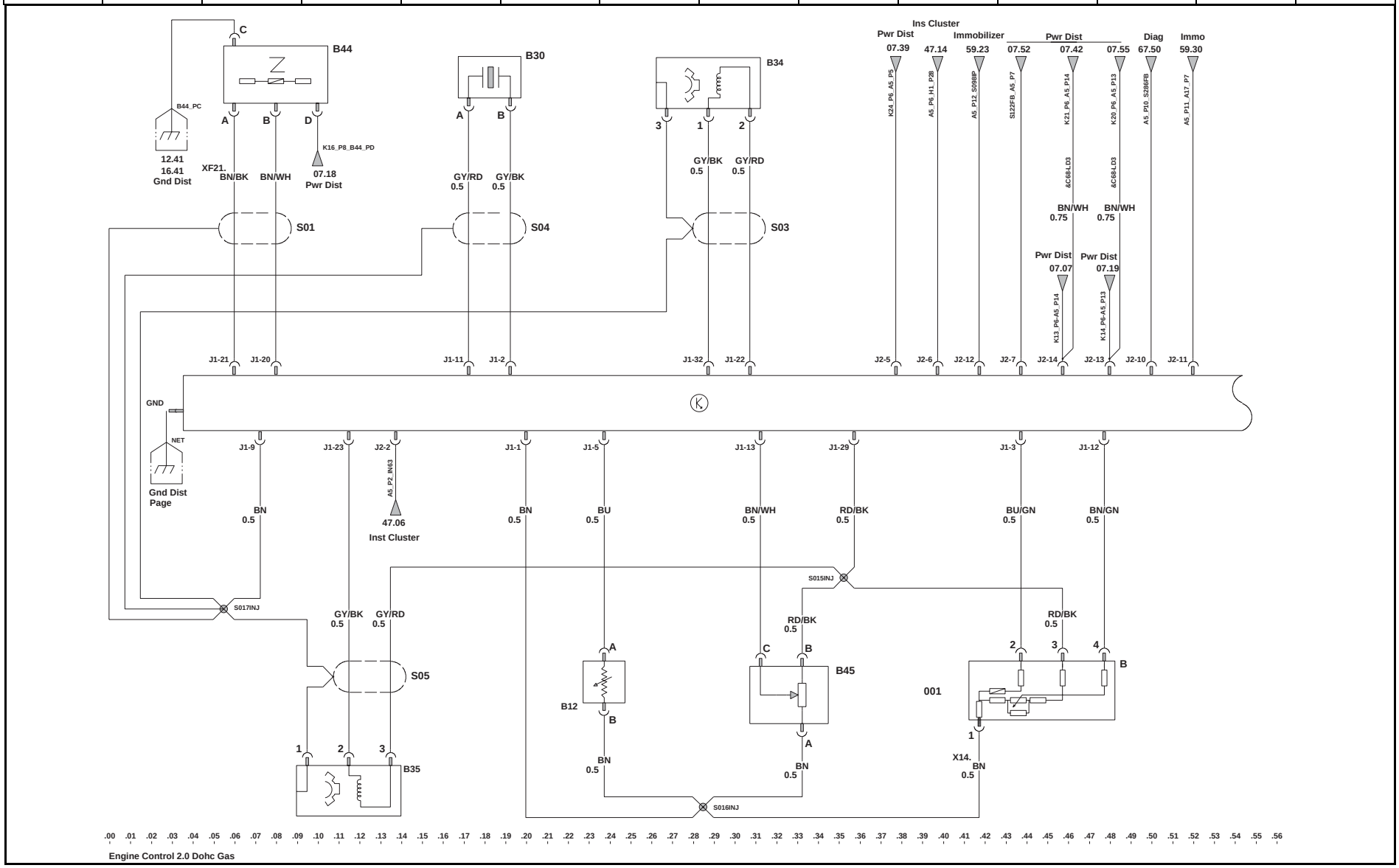

Cores - Fios / Colores - Alambres / Wires - Colors													
PR= Preto Negro / Black	MR = Marrom Marrón / Brown	AZ = Azul Azul / Blue	CZ = Cinza Gris / Gray	VD= Verde Verde / Green	*ORN= Laranja* Naranja /Orange	*PNK = Rosa* Rosa / Pink	*VL= Violeta* Violeta / Purple	*VM = Vermelho* Rojo / Red	*TAN= Beje* Beije / Tan	*BR = Branco* Blanco / White	*AM= Amarelo* Amarillo / Yellow	*LT = Claro* Claro / Light	*DK = Escuro* Oscuro / Dark

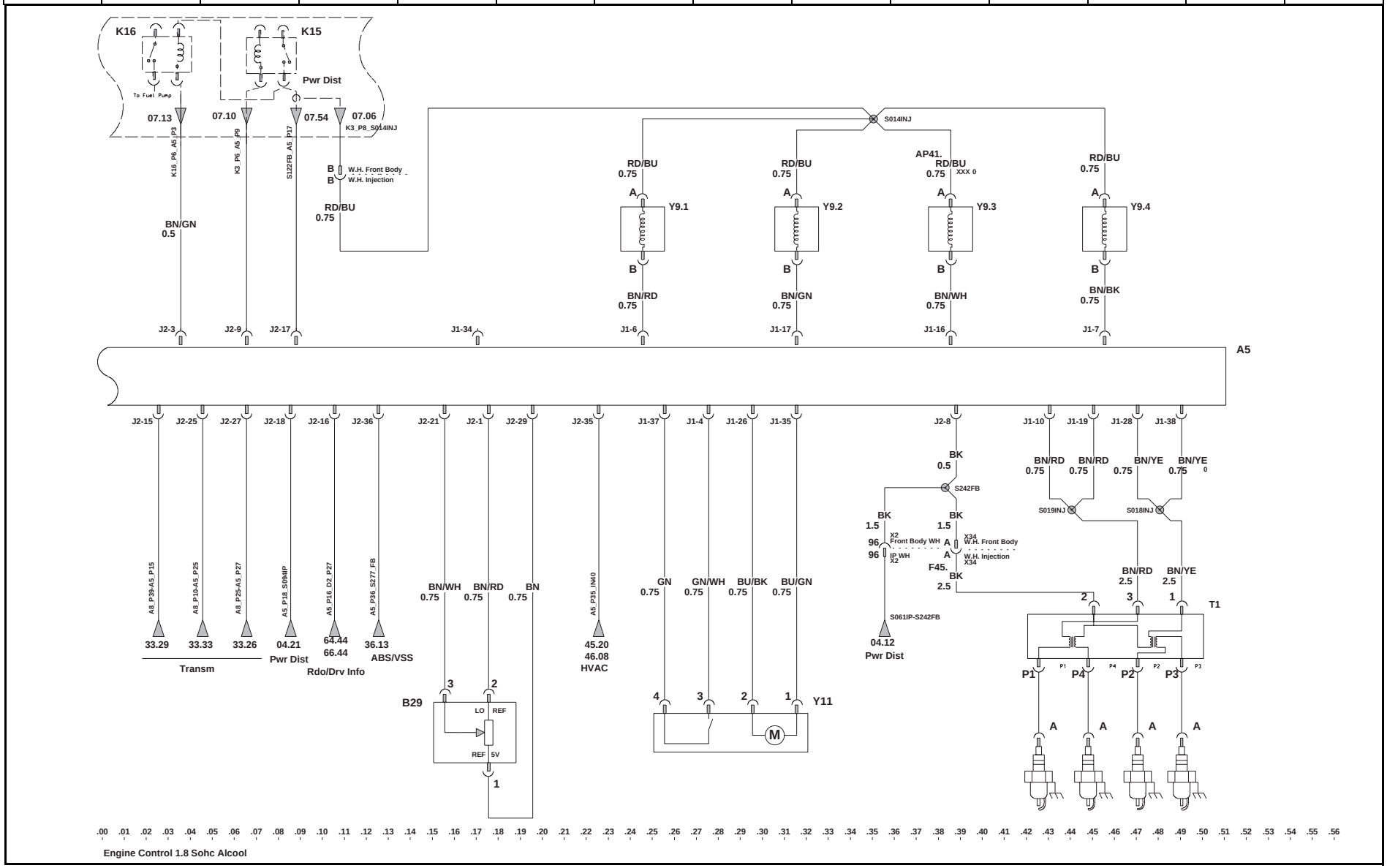

Cores - Fios / Colores - Alambres / Wires - Colors													
PR= Preto Negro / Black	MR = Marrom Marrón / Brown	AZ = Azul Azul / Blue	CZ = Cinza Gris / Gray	VD= Verde Verde / Green	*ORN= Laranja* Naranja /Orange	*PNK = Rosa* Rosa / Pink	*VL= Violeta* Violeta / Purple	*VM = Vermelho* Rojo / Red	*TAN= Beje* Beije / Tan	*BR = Branco* Blanco / White	*AM= Amarelo* Amarillo / Yellow	*LT = Claro* Claro / Light	*DK = Escuro* Oscuro / Dark

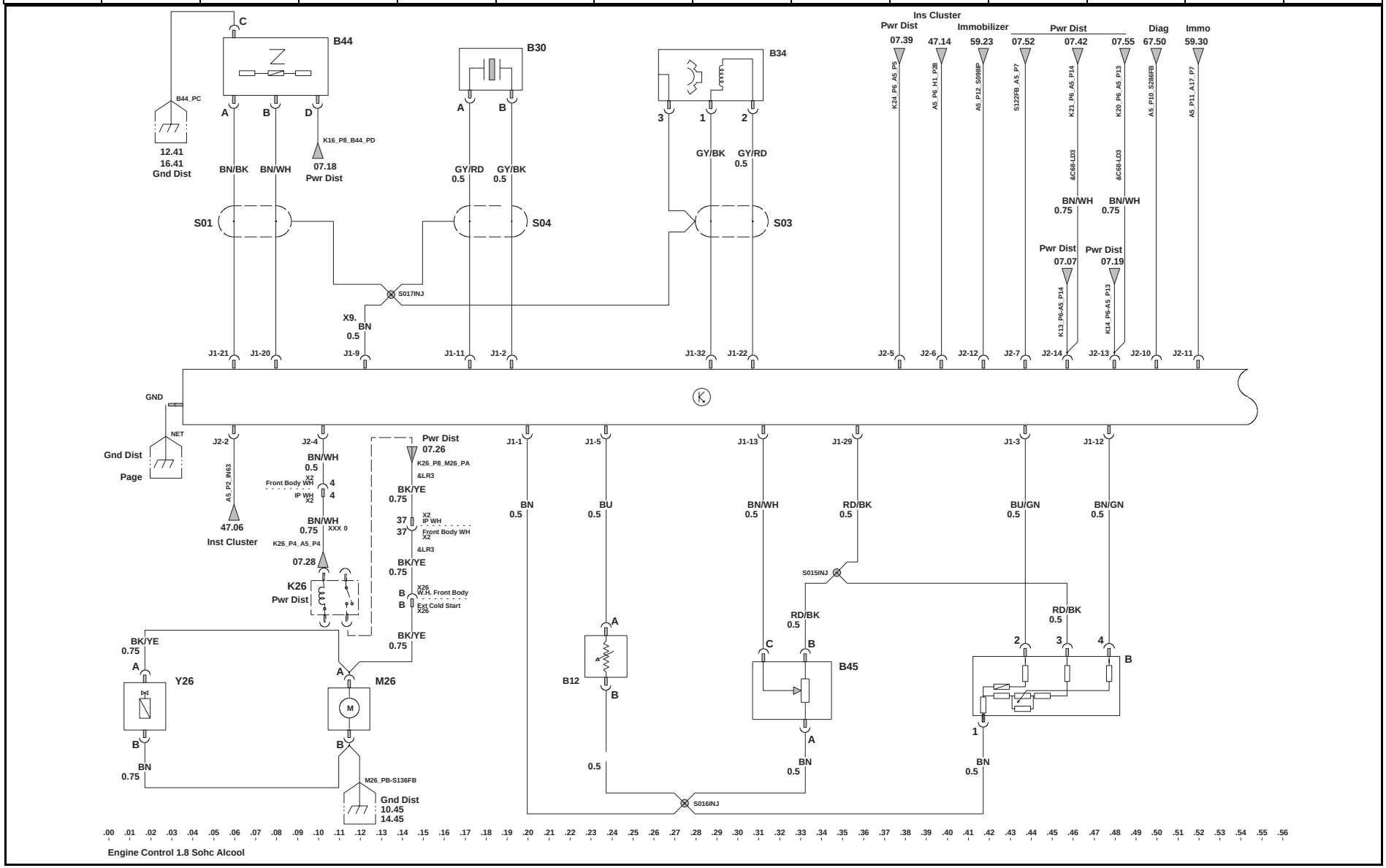

Cores - Fios / Colores - Alambres / Wires - Colors													
PR= Preto	MR = Marrom	AZ = Azul	CZ = Cinza	VD= Verde	*ORN= Laranja*	*PNK = Rosa*	*VL= Violeta*	*VM = Vermelho*	*TAN= Beje*	*BR = Branco*	*AM= Amarelo*	*LT = Claro*	*DK = Escuro*
Negro / Black	*Marrón / Brown*	*Azul / Blue*	*Gris / Gray*	*Verde / Green*	*Naranja /Orange*	*Rosa / Pink*	*Violeta / Purple*	*Rojo / Red*	*Beije / Tan*	*Blanco / White*	*Amarillo / Yellow*	*Claro / Light*	*Oscuro / Dark*

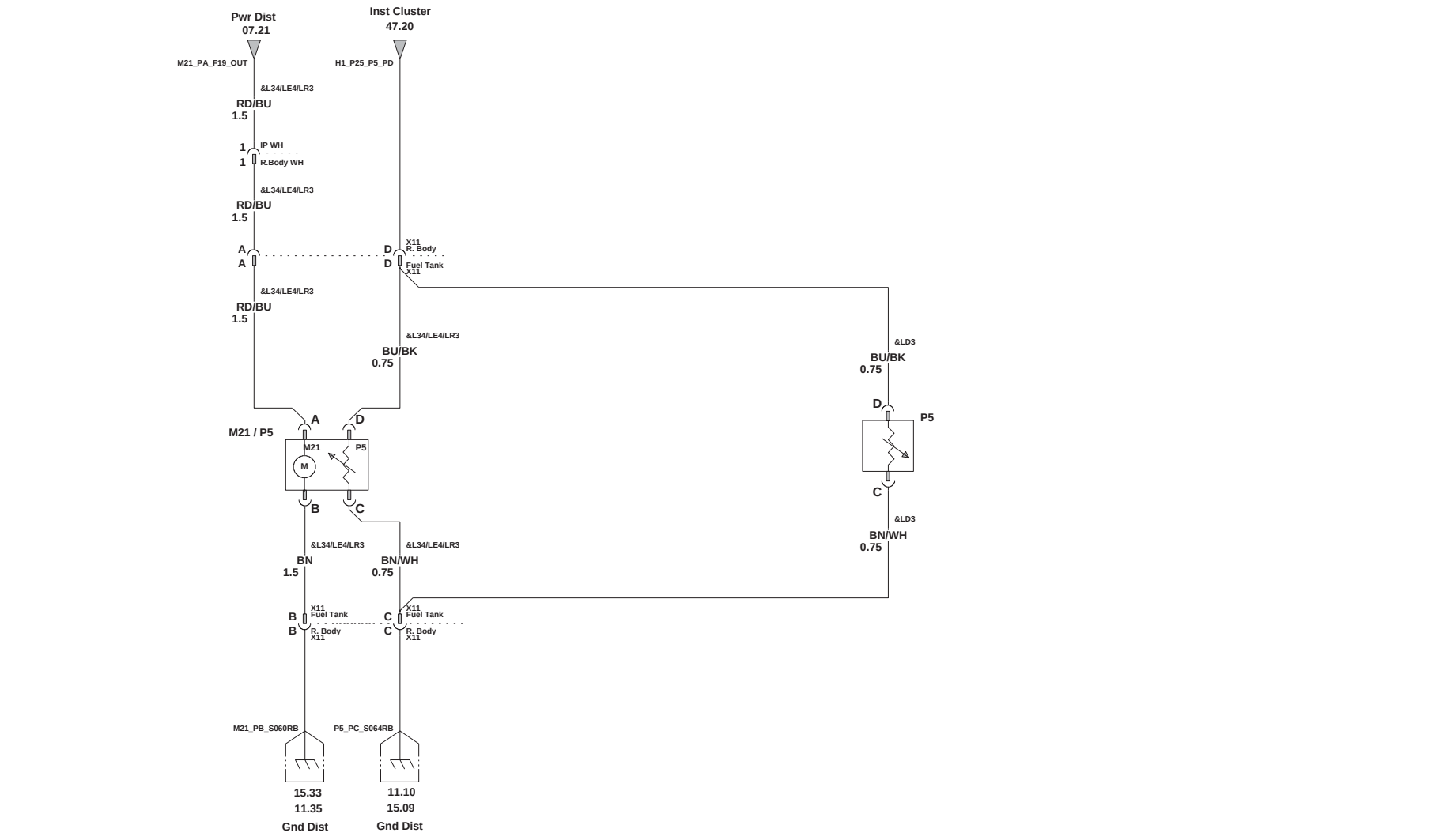

Cores - Fios / Colores - Alambres / Wires - Colors												
PR= Preto Negro / Black	*MR = Marrom* Marrón / Brown	*AZ = Azul* Azul / Blue	*CZ = Cinza* Gris / Gray	*VD= Verde* Verde / Green	*ORN= Laranja* Naranja /Orange	*PNK = Rosa* Rosa / Pink	*VL= Violeta* Violeta / Purple	*VM = Vermelho* Rojo / Red	*TAN= Beje* Beije / Tan	*BR = Branco* Blanco / White	*AM= Amarelo* Amarillo / Yellow	*LT = Claro* Claro / Light	*DK = Escuro* Oscuro / Dark

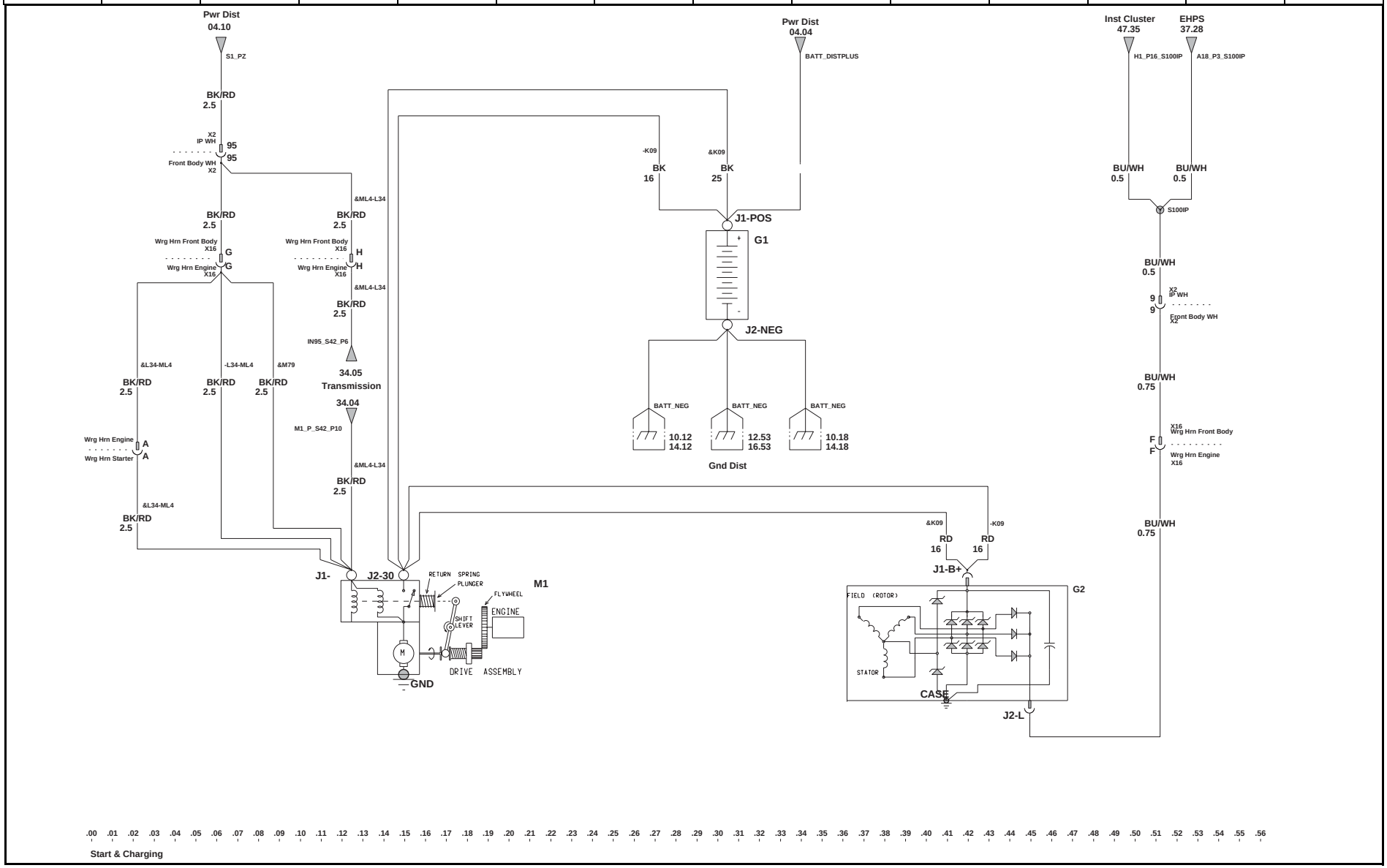

Cores - Fios / Colores - Alambres / Wires - Colors													
PR= Preto	MR = Marrom	AZ = Azul	CZ = Cinza	VD= Verde	*ORN= Laranja*	*PNK = Rosa*	*VL= Violeta*	*VM = Vermelho*	*TAN= Beje*	*BR = Branco*	*AM= Amarelo*	*LT = Claro*	*DK = Escuro*
Negro / Black	*Marrón / Brown*	*Azul / Blue*	*Gris / Gray*	*Verde / Green*	*Naranja /Orange*	*Rosa / Pink*	*Violeta / Purple*	*Rojo / Red*	*Beije / Tan*	*Blanco / White*	*Amarillo / Yellow*	*Claro / Light*	*Oscuro / Dark*

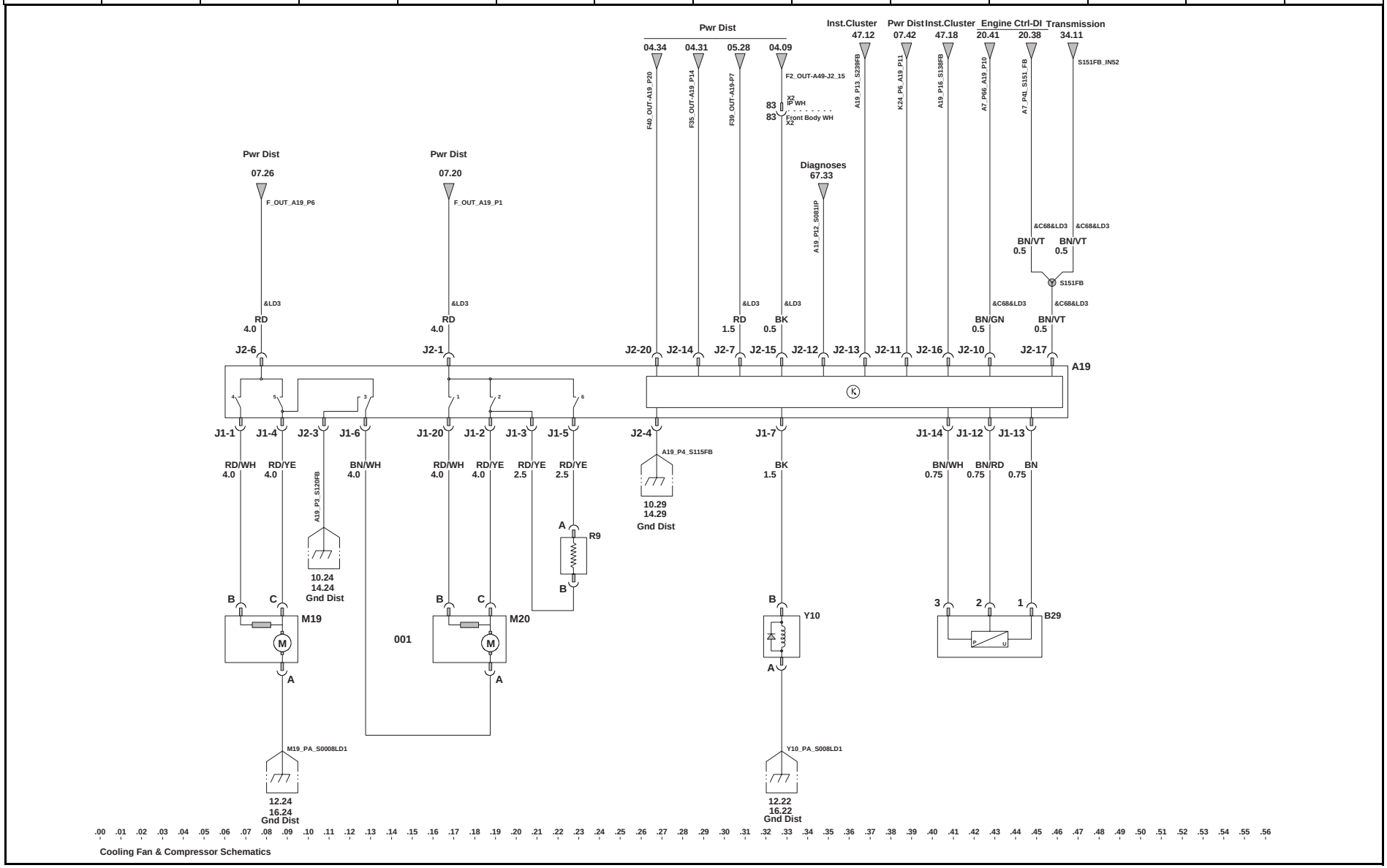

Cooling Fan & Compressor Schematics

Cores - Fios / Colores - Alambres / Wires - Colors													
PR= Preto *Negro / Black*	**MR = Marrom** *Marrón / Brown*	**AZ = Azul** *Azul / Blue*	**CZ = Cinza** *Gris / Gray*	**VD= Verde** *Verde / Green*	***ORN= Laranja*** *Naranja /Orange*	***PNK = Rosa*** *Rosa / Pink*	***VL= Violeta*** *Violeta / Purple*	***VM = Vermelho*** *Rojo / Red*	***TAN= Beje*** *Beije / Tan*	***BR = Branco*** *Blanco / White*	***AM= Amarelo*** *Amarillo / Yellow*	***LT = Claro*** *Claro / Light*	***DK = Escuro*** *Oscuro / Dark*

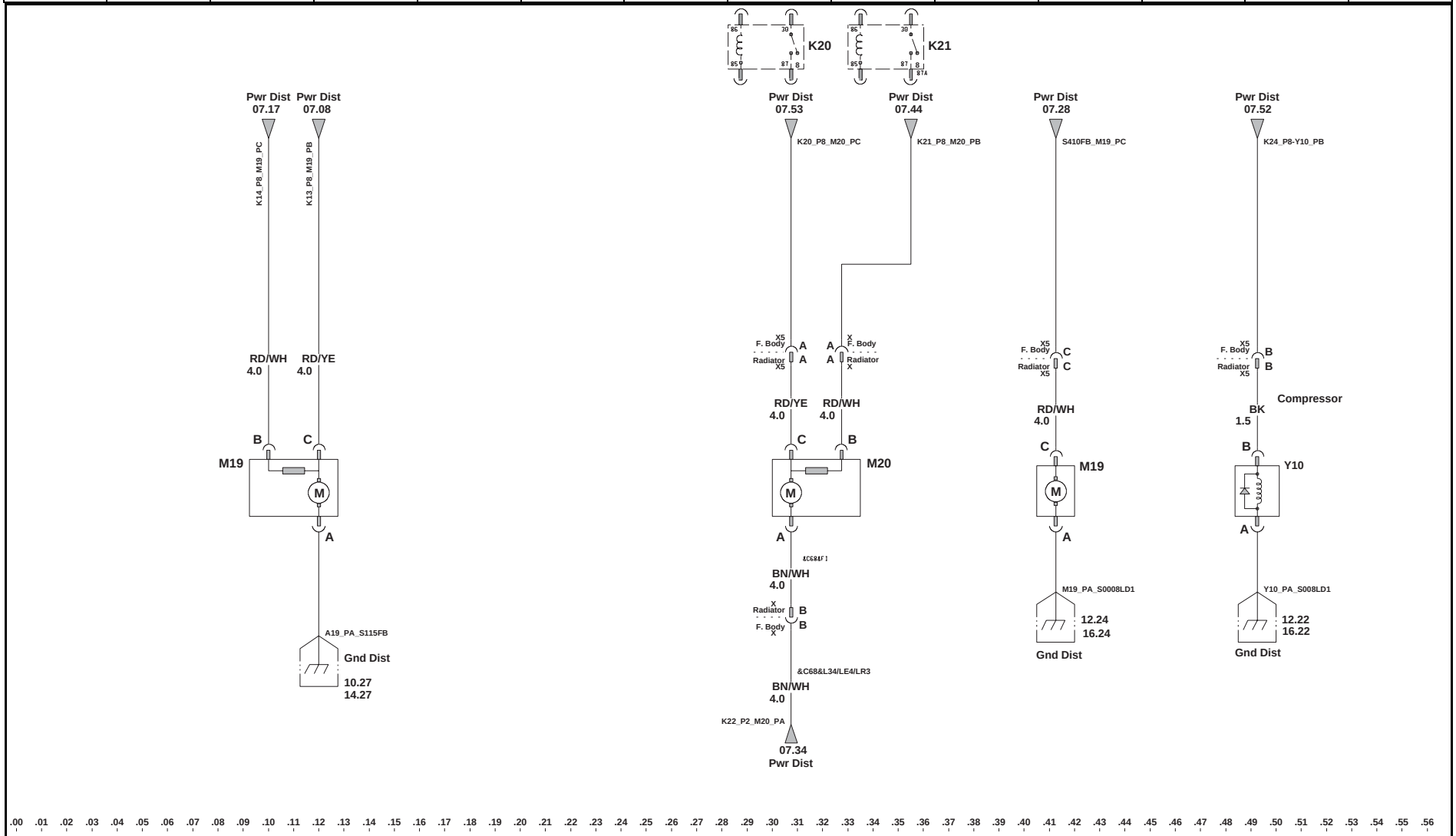

Cooling Fan & Compressor Schematics

Cores - Fios / Colores - Alambres / Wires - Colors													
PR= Preto Negro / Black	MR = Marrom Marrón / Brown	AZ = Azul Azul / Blue	CZ = Cinza Gris / Gray	VD= Verde Verde / Green	*ORN= Laranja* Naranja /Orange	*PNK = Rosa* Rosa / Pink	*VL= Violeta* Violeta / Purple	*VM = Vermelho* Rojo / Red	*TAN= Beje* Beije / Tan	*BR = Branco* Blanco / White	*AM= Amarelo* Amarillo / Yellow	*LT = Claro* Claro / Light	*DK = Escuro* Oscuro / Dark

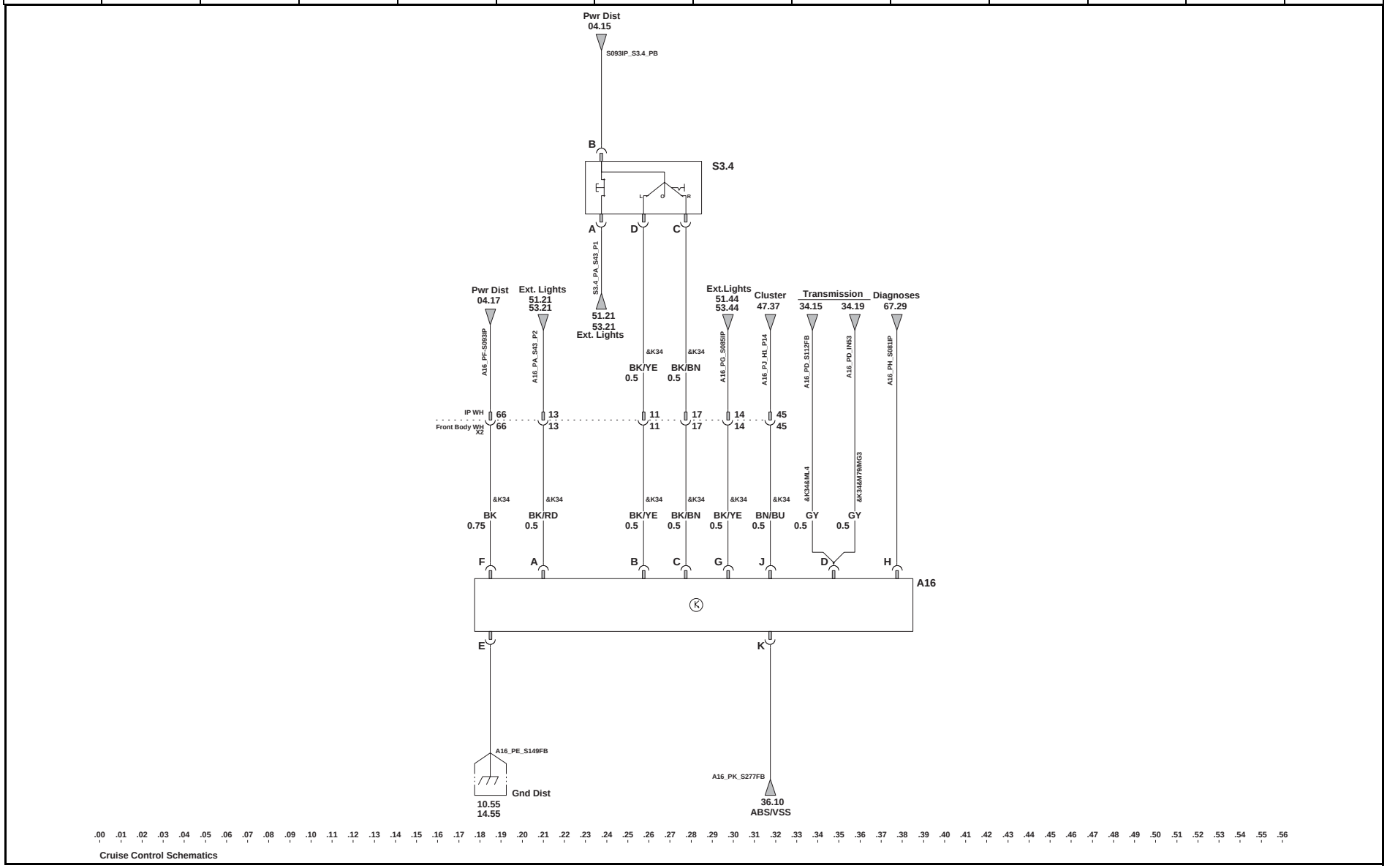

Cores - Fios / Colores - Alambres / Wires - Colors													
PR= Preto	MR = Marrom	AZ = Azul	CZ = Cinza	VD= Verde	*ORN= Laranja*	*PNK = Rosa*	*VL= Violeta*	*VM = Vermelho*	*TAN= Beje*	*BR = Branco*	*AM= Amarelo*	*LT = Claro*	*DK = Escuro*
Negro / Black	*Marrón / Brown*	*Azul / Blue*	*Gris / Gray*	*Verde / Green*	*Naranja /Orange*	*Rosa / Pink*	*Violeta / Purple*	*Rojo / Red*	*Beije / Tan*	*Blanco / White*	*Amarillo / Yellow*	*Claro / Light*	*Oscuro / Dark*

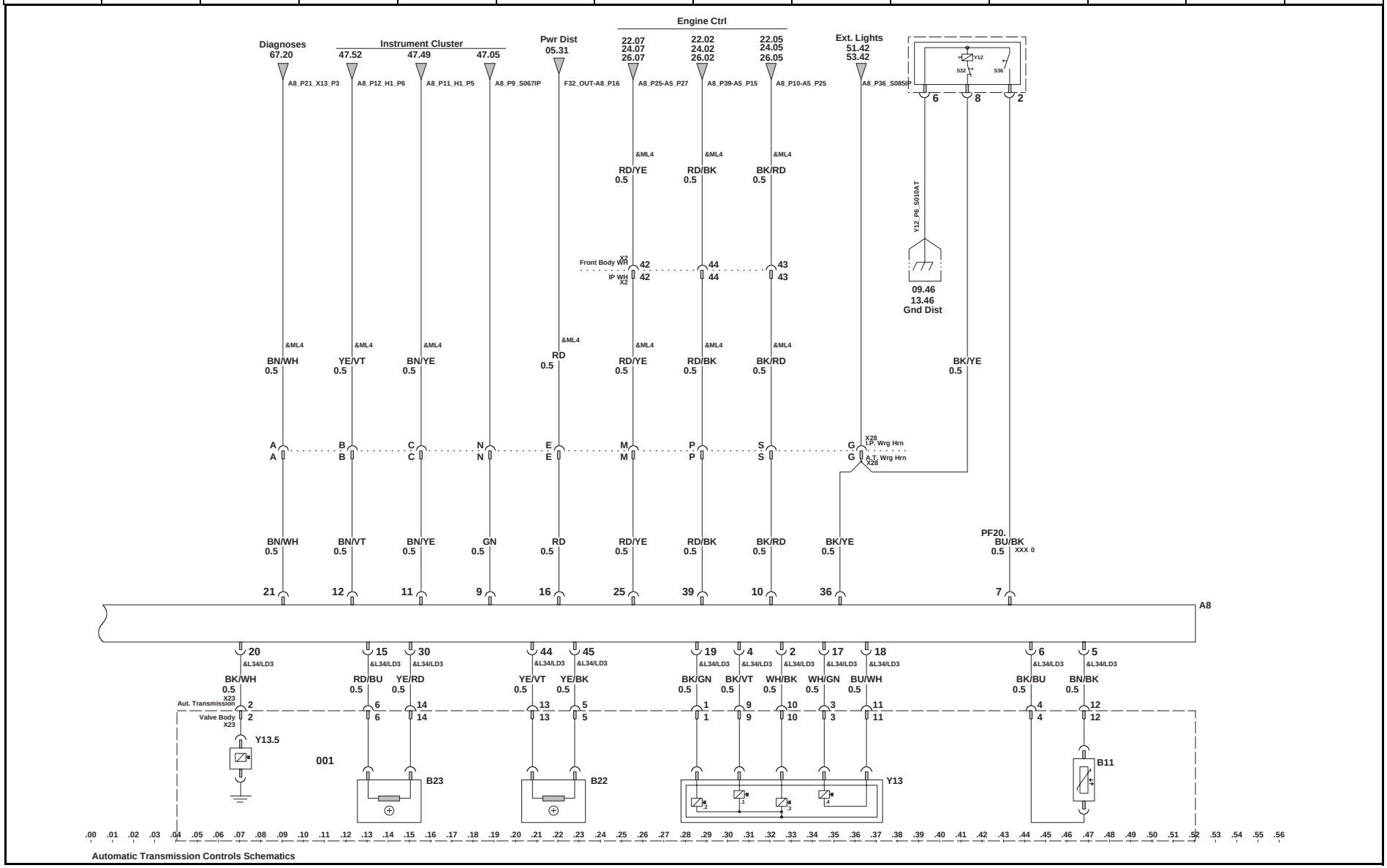

Cores - Fios / Colores - Alambres / Wires - Colors												
PR= Preto	MR = Marrom	AZ = Azul	CZ = Cinza	VD= Verde	*ORN= Laranja*	*PNK = Rosa*	*VL= Violeta*	*VM = Vermelho*	*TAN= Beje*	*BR = Branco*	*AM= Amarelo*	*LT = Claro*	*DK = Escuro*
Negro / Black	*Marrón / Brown*	*Azul / Blue*	*Gris / Gray*	*Verde / Green*	*Naranja /Orange*	*Rosa / Pink*	*Violeta / Purple*	*Rojo / Red*	*Beije / Tan*	*Blanco / White*	*Amarillo / Yellow*	*Claro / Light*	*Oscuro / Dark*

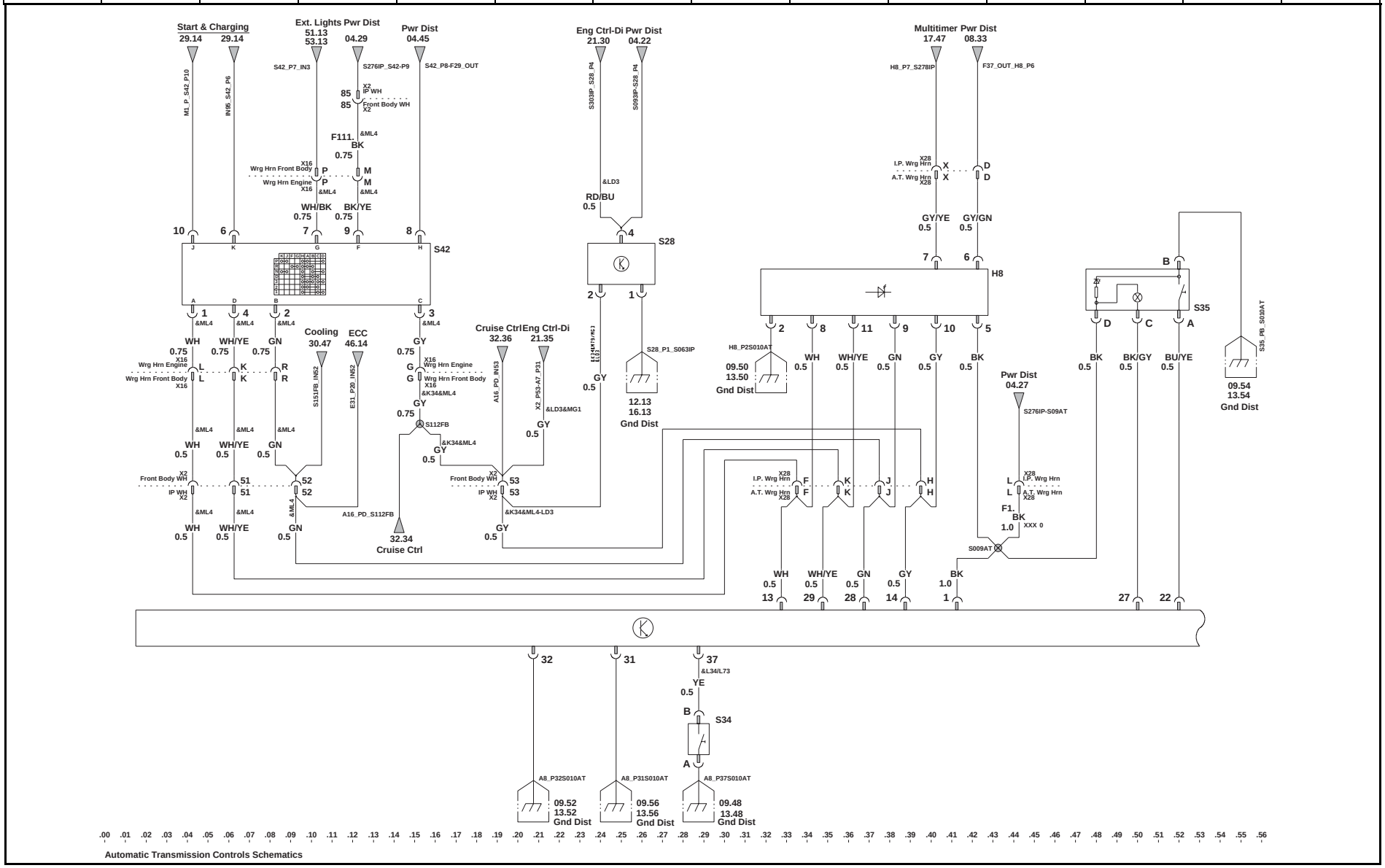

Cores - Fios / Colores - Alambres / Wires - Colors													
PR= Preto *Negro / Black*	**MR = Marrom** *Marrón / Brown*	**AZ = Azul** *Azul / Blue*	**CZ = Cinza** *Gris / Gray*	**VD= Verde** *Verde / Green*	***ORN= Laranja*** *Naranja /Orange*	***PNK = Rosa*** *Rosa / Pink*	***VL= Violeta*** *Violeta / Purple*	***VM = Vermelho*** *Rojo / Red*	***TAN= Beje*** *Beije / Tan*	***BR = Branco*** *Blanco / White*	***AM= Amarelo*** *Amarillo / Yellow*	***LT = Claro*** *Claro / Light*	***DK = Escuro*** *Oscuro / Dark*

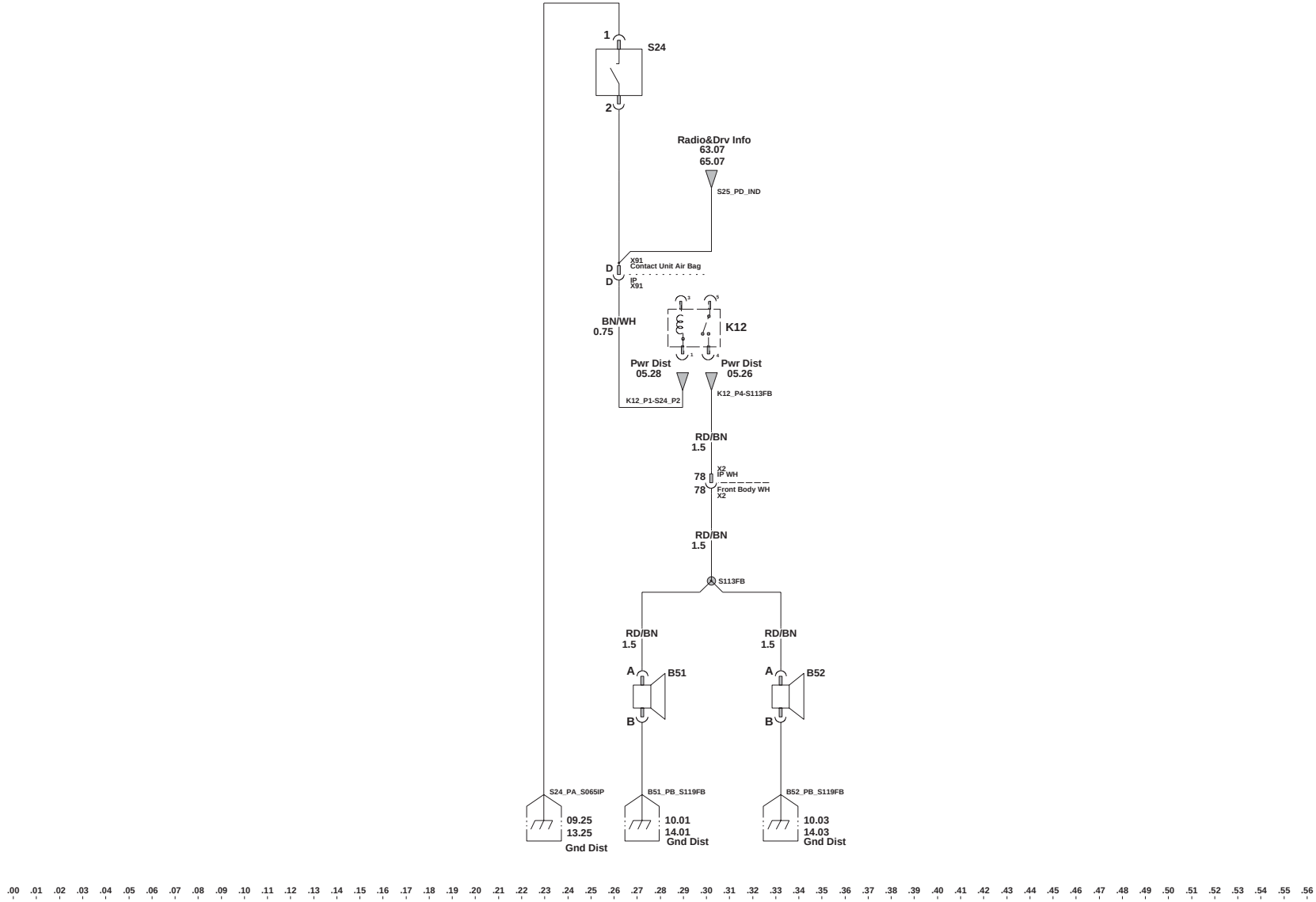

Cores - Fios / Colores - Alambres / Wires - Colors													
PR= Preto	*MR = Marrom*	*AZ = Azul*	*CZ = Cinza*	*VD= Verde*	*ORN= Laranja*	*PNK = Rosa*	*VL= Violeta*	*VM = Vermelho*	*TAN= Beje*	*BR = Branco*	*AM= Amarelo*	*LT = Claro*	*DK = Escuro*
Negro / Black	Marrón / Brown	Azul / Blue	Gris / Gray	Verde / Green	Naranja /Orange	Rosa / Pink	Violeta / Purple	Rojo / Red	Beije / Tan	Blanco / White	Amarillo / Yellow	Claro / Light	Oscuro / Dark

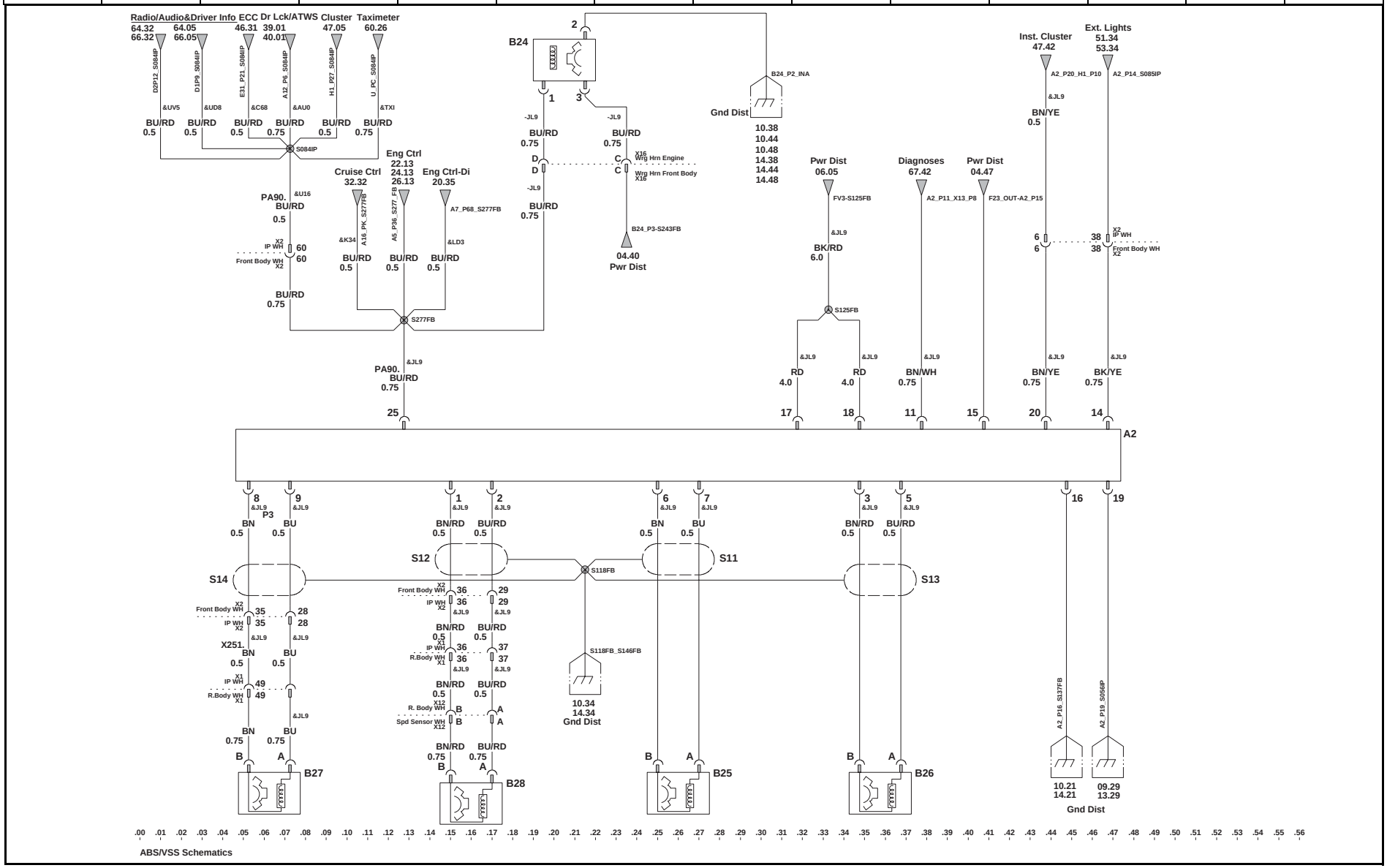

Cores - Fios / Colores - Alambres / Wires - Colors													
PR= Preto	MR = Marrom	AZ = Azul	CZ = Cinza	VD= Verde	*ORN= Laranja*	*PNK = Rosa*	*VL= Violeta*	*VM = Vermelho*	*TAN= Beje*	*BR = Branco*	*AM= Amarelo*	*LT = Claro*	*DK = Escuro*
Negro / Black	*Marrón / Brown*	*Azul / Blue*	*Gris / Gray*	*Verde / Green*	*Naranja /Orange*	*Rosa / Pink*	*Violeta / Purple*	*Rojo / Red*	*Beije / Tan*	*Blanco / White*	*Amarillo / Yellow*	*Claro / Light*	*Oscuro / Dark*

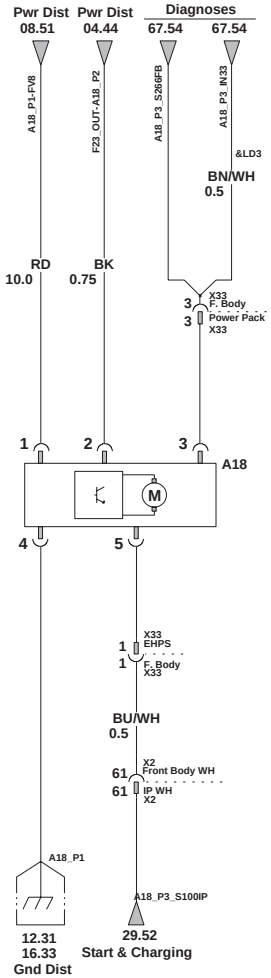

.00 .01 .02 .03 .04 .05 .06 .07 .08 .09 .10 .11 .12 .13 .14 .15 .16 .17 .18 .19 .20 .21 .22 .23 .24 .25 .26 .27 .28 .29 .30 .31 .32 .33 .34 .35 .36 .37 .38 .39 .40 .41 .42 .43 .44 .45 .46 .47 .48 .49 .50 .51 .52 .53 .54 .55 .56

Electric Hydraulic Power Steering

Cores - Fios / Colores - Alambres / Wires - Colors													
PR= Preto Negro / Black	MR = Marrom Marrón / Brown	AZ = Azul Azul / Blue	CZ = Cinza Gris / Gray	VD= Verde Verde / Green	*ORN= Laranja* Naranja /Orange	*PNK = Rosa* Rosa / Pink	*VL= Violeta* Violeta / Purple	*VM = Vermelho* Rojo / Red	*TAN= Beje* Beije / Tan	*BR = Branco* Blanco / White	*AM= Amarelo* Amarillo / Yellow	*LT = Claro* Claro / Light	*DK = Escuro* Oscuro / Dark

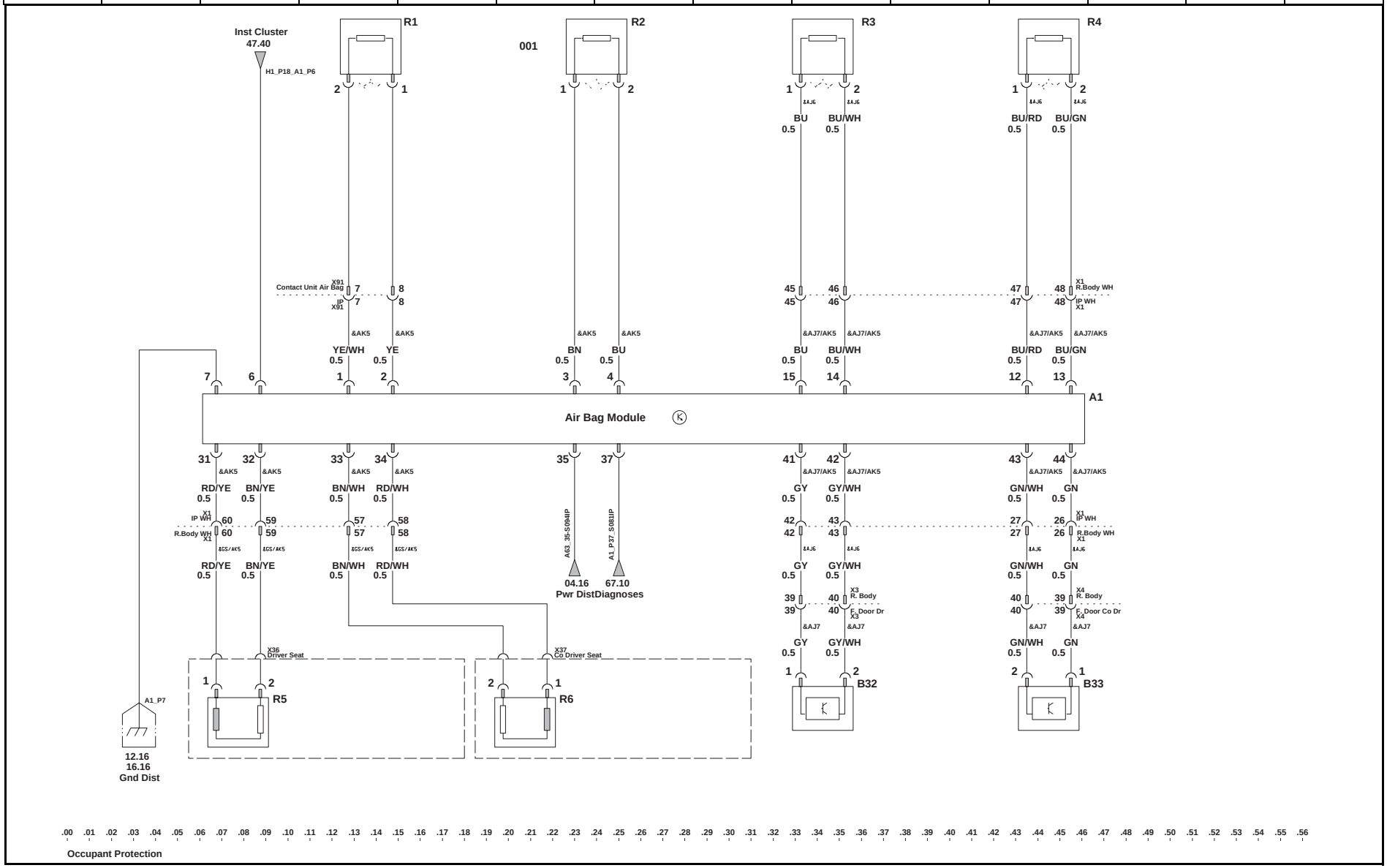

Cores - Fios / Colores - Alambres / Wires - Colors													
PR= Preto	*MR = Marrom*	*AZ = Azul*	*CZ = Cinza*	*VD= Verde*	*ORN= Laranja*	*PNK = Rosa*	*VL= Violeta*	*VM = Vermelho*	*TAN= Beje*	*BR = Branco*	*AM= Amarelo*	*LT = Claro*	*DK = Escuro*
Negro / Black	*Marrón / Brown*	*Azul / Blue*	*Gris / Gray*	*Verde / Green*	*Naranja /Orange*	*Rosa / Pink*	*Violeta / Purple*	*Rojo / Red*	*Beije / Tan*	*Blanco / White*	*Amarillo / Yellow*	*Claro / Light*	*Oscuro / Dark*

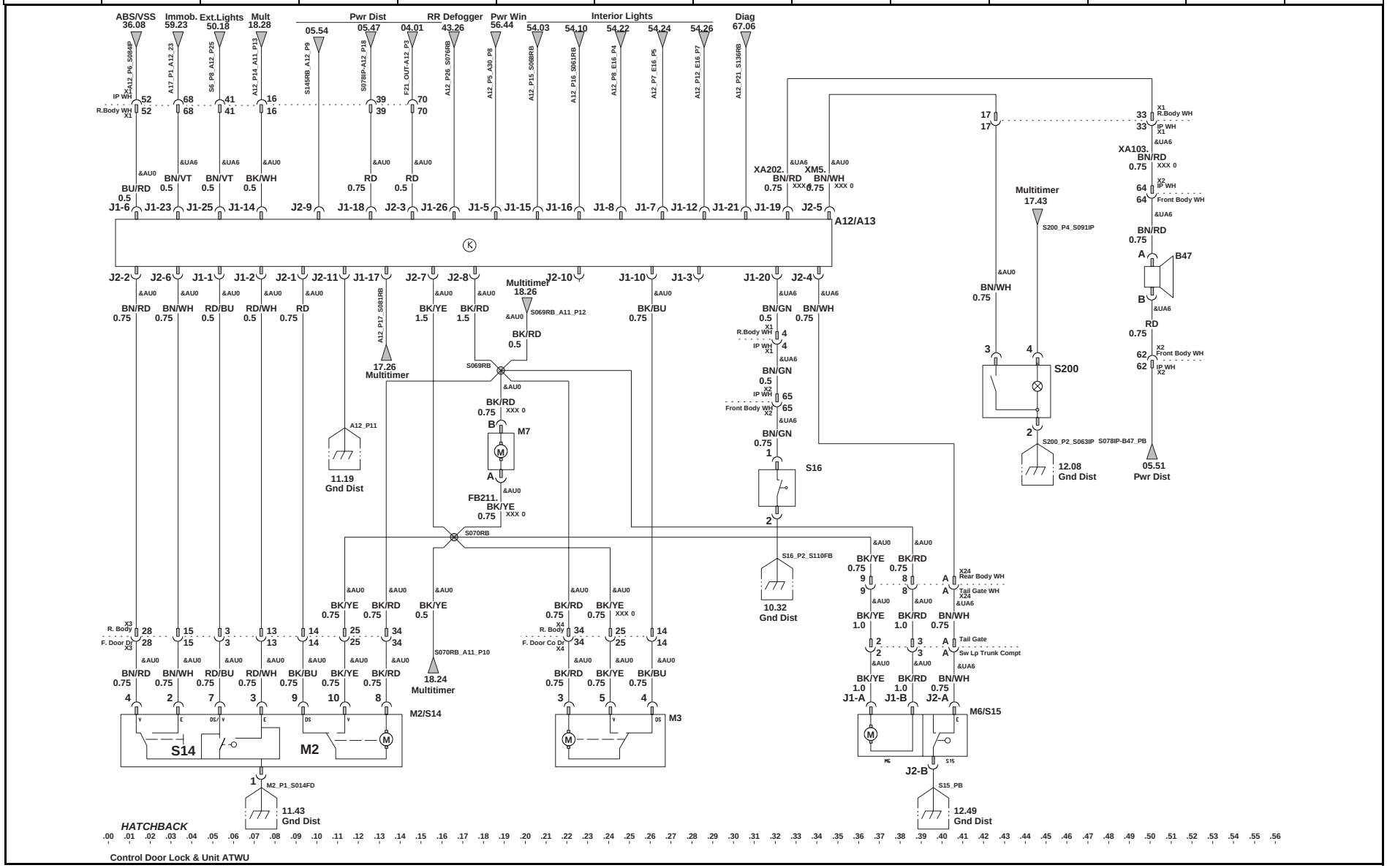

Cores - Fios / Colores - Alambres / Wires - Colors													
PR= Preto	MR = Marrom	AZ = Azul	CZ = Cinza	VD= Verde	*ORN= Laranja*	*PNK = Rosa*	*VL= Violeta*	*VM = Vermelho*	*TAN= Beje*	*BR = Branco*	*AM= Amarelo*	*LT = Claro*	*DK = Escuro*
Negro / Black	*Marrón / Brown*	*Azul / Blue*	*Gris / Gray*	*Verde / Green*	*Naranja /Orange*	*Rosa / Pink*	*Violeta / Purple*	*Rojo / Red*	*Beije / Tan*	*Blanco / White*	*Amarillo / Yellow*	*Claro / Light*	*Oscuro / Dark*

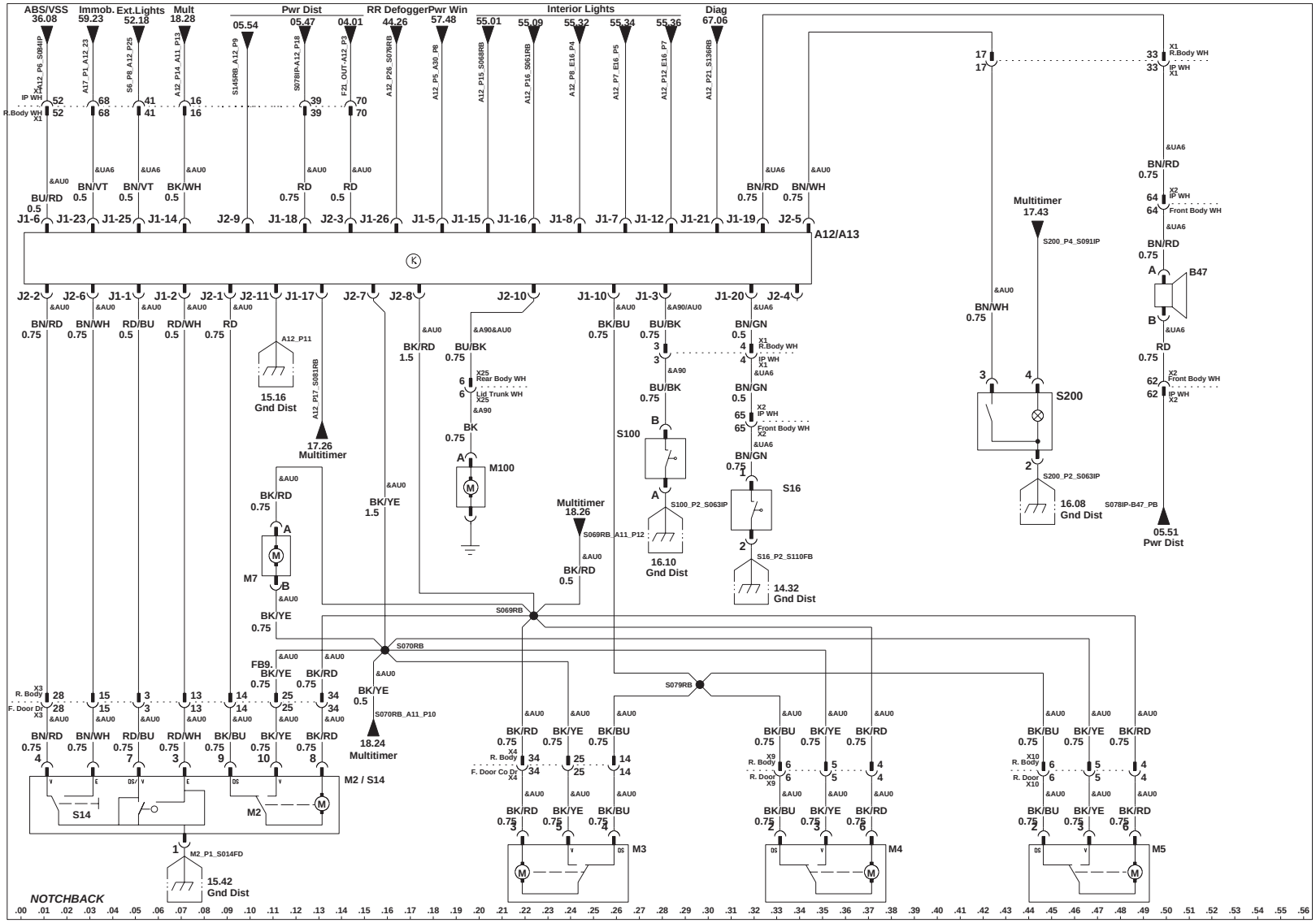

Cores - Fios / Colores - Alambres / Wires - Colors													
PR= Preto	MR = Marrom	AZ = Azul	CZ = Cinza	VD= Verde	*ORN= Laranja*	*PNK = Rosa*	*VL= Violeta*	*VM = Vermelho*	*TAN= Beje*	*BR = Branco*	*AM= Amarelo*	*LT = Claro*	*DK = Escuro*
Negro / Black	*Marrón / Brown*	*Azul / Blue*	*Gris / Gray*	*Verde / Green*	*Naranja /Orange*	*Rosa / Pink*	*Violeta / Purple*	*Rojo / Red*	*Beije / Tan*	*Blanco / White*	*Amarillo / Yellow*	*Claro / Light*	*Oscuro / Dark*

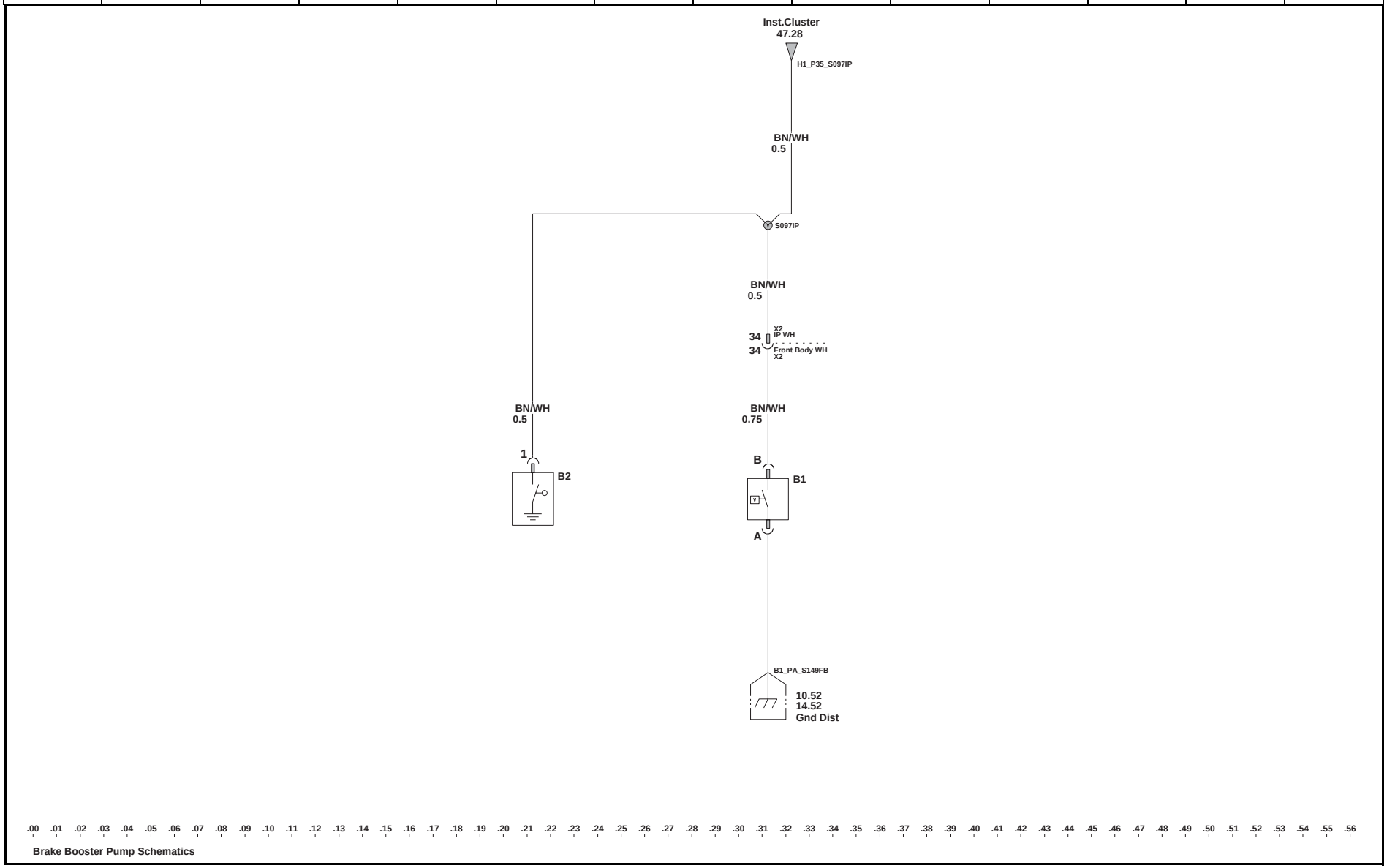

Cores - Fios / Colores - Alambres / Wires - Colors													
PR= Preto	MR = Marrom	AZ = Azul	CZ = Cinza	VD= Verde	*ORN= Laranja*	*PNK = Rosa*	*VL= Violeta*	*VM = Vermelho*	*TAN= Beje*	*BR = Branco*	*AM= Amarelo*	*LT = Claro*	*DK = Escuro*
Negro / Black	*Marrón / Brown*	*Azul / Blue*	*Gris / Gray*	*Verde / Green*	*Naranja /Orange*	*Rosa / Pink*	*Violeta / Purple*	*Rojo / Red*	*Beije / Tan*	*Blanco / White*	*Amarillo / Yellow*	*Claro / Light*	*Oscuro / Dark*

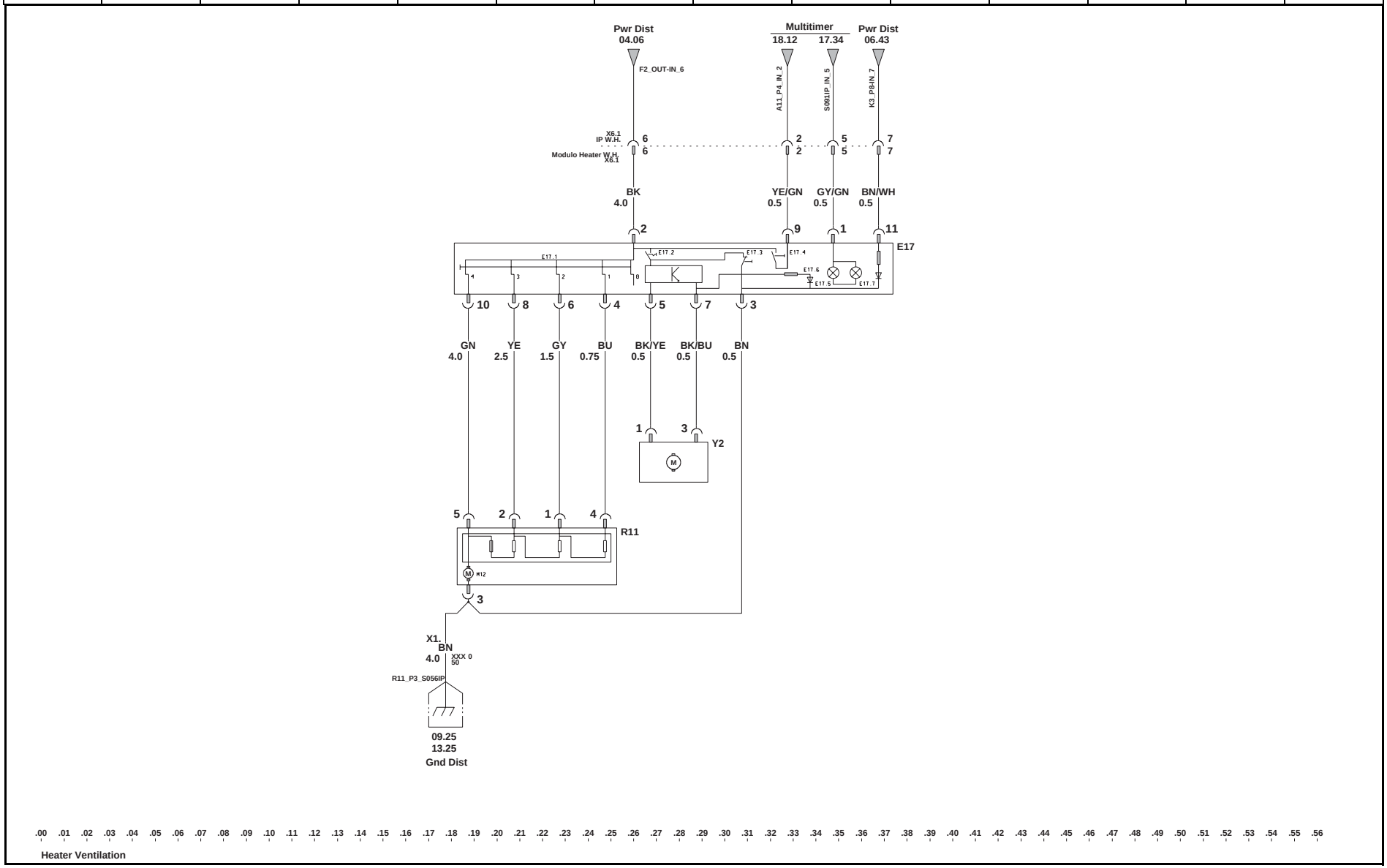

Cores - Fios / Colores - Alambres / Wires - Colors													
PR= Preto	MR = Marrom	AZ = Azul	CZ = Cinza	VD= Verde	*ORN= Laranja*	*PNK = Rosa*	*VL= Violeta*	*VM = Vermelho*	*TAN= Beje*	*BR = Branco*	*AM= Amarelo*	*LT = Claro*	*DK = Escuro*
Negro / Black	*Marrón / Brown*	*Azul / Blue*	*Gris / Gray*	*Verde / Green*	*Naranja /Orange*	*Rosa / Pink*	*Violeta / Purple*	*Rojo / Red*	*Beije / Tan*	*Blanco / White*	*Amarillo / Yellow*	*Claro / Light*	*Oscuro / Dark*

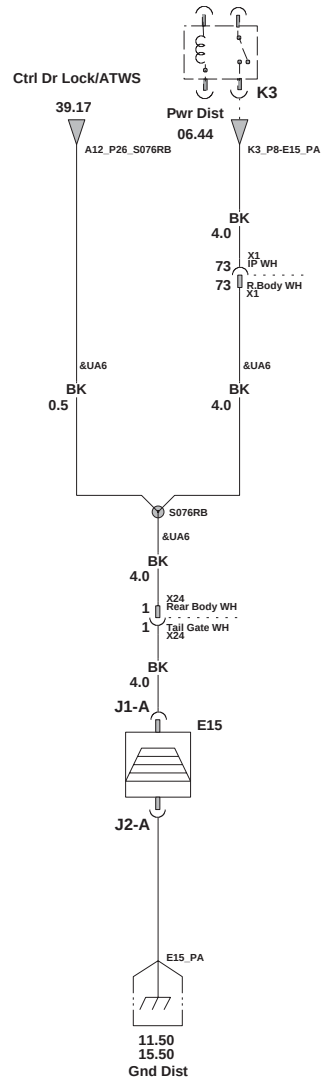

HATCHBACK

.00 .01 .02 .03 .04 .05 .06 .07 .08 .09 .10 .11 .12 .13 .14 .15 .16 .17 .18 .19 .20 .21 .22 .23 .24 .25 .26 .27 .28 .29 .30 .31 .32 .33 .34 .35 .36 .37 .38 .39 .40 .41 .42 .43 .44 .45 .46 .47 .48 .49 .50 .51 .52 .53 .54 .55 .56

Defogger

Cores - Fios / Colores - Alambres / Wires - Colors													
PR= Preto	MR = Marrom	AZ = Azul	CZ = Cinza	VD= Verde	*ORN= Laranja*	*PNK = Rosa*	*VL= Violeta*	*VM = Vermelho*	*TAN= Beje*	*BR = Branco*	*AM= Amarelo*	*LT = Claro*	*DK = Escuro*
Negro / Black	*Marrón / Brown*	*Azul / Blue*	*Gris / Gray*	*Verde / Green*	*Naranja /Orange*	*Rosa / Pink*	*Violeta / Purple*	*Rojo / Red*	*Beije / Tan*	*Blanco / White*	*Amarillo / Yellow*	*Claro / Light*	*Oscuro / Dark*

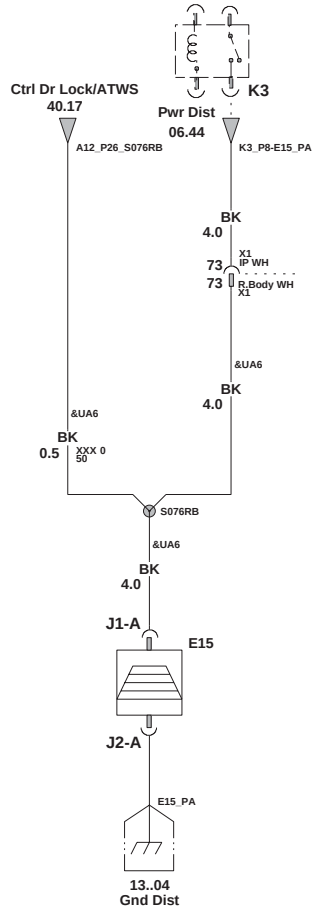

NOTCHBACK

.00 .01 .02 .03 .04 .05 .06 .07 .08 .09 .10 .11 .12 .13 .14 .15 .16 .17 .18 .19 .20 .21 .22 .23 .24 .25 .26 .27 .28 .29 .30 .31 .32 .33 .34 .35 .36 .37 .38 .39 .40 .41 .42 .43 .44 .45 .46 .47 .48 .49 .50 .51 .52 .53 .54 .55 .56

Defogger

Cores - Fios / Colores - Alambres / Wires - Colors													
PR= Preto Negro / Black	MR = Marrom Marrón / Brown	AZ = Azul Azul / Blue	CZ = Cinza Gris / Gray	VD= Verde Verde / Green	*ORN= Laranja* Naranja /Orange	*PNK = Rosa* Rosa / Pink	*VL= Violeta* Violeta / Purple	*VM = Vermelho* Rojo / Red	*TAN= Beje* Beije / Tan	*BR = Branco* Blanco / White	*AM= Amarelo* Amarillo / Yellow	*LT = Claro* Claro / Light	*DK = Escuro* Oscuro / Dark

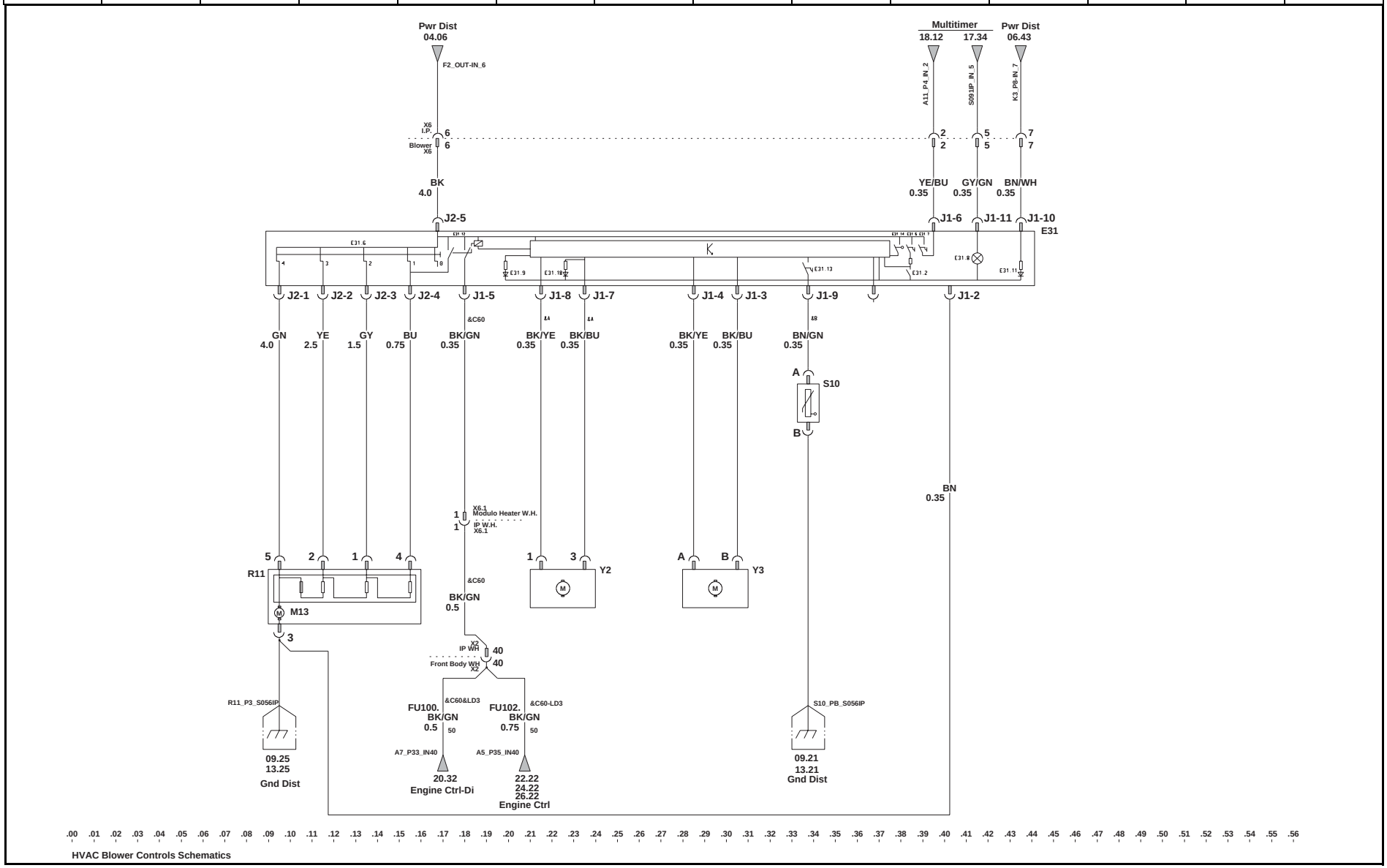

HVAC Blower Controls Schematics

Cores - Fios / Colores - Alambres / Wires - Colors												
PR= Preto	*MR = Marrom*	*AZ = Azul*	*CZ = Cinza*	*VD= Verde*	*ORN= Laranja*	*PNK = Rosa*	*VL= Violeta*	*VM = Vermelho*	*TAN= Beje*	*BR = Branco*	*AM= Amarelo*	*LT = Claro*	*DK = Escuro*
Negro / Black	*Marrón / Brown*	*Azul / Blue*	*Gris / Gray*	*Verde / Green*	*Naranja /Orange*	*Rosa / Pink*	*Violeta / Purple*	*Rojo / Red*	*Beije / Tan*	*Blanco / White*	*Amarillo / Yellow*	*Claro / Light*	*Oscuro / Dark*

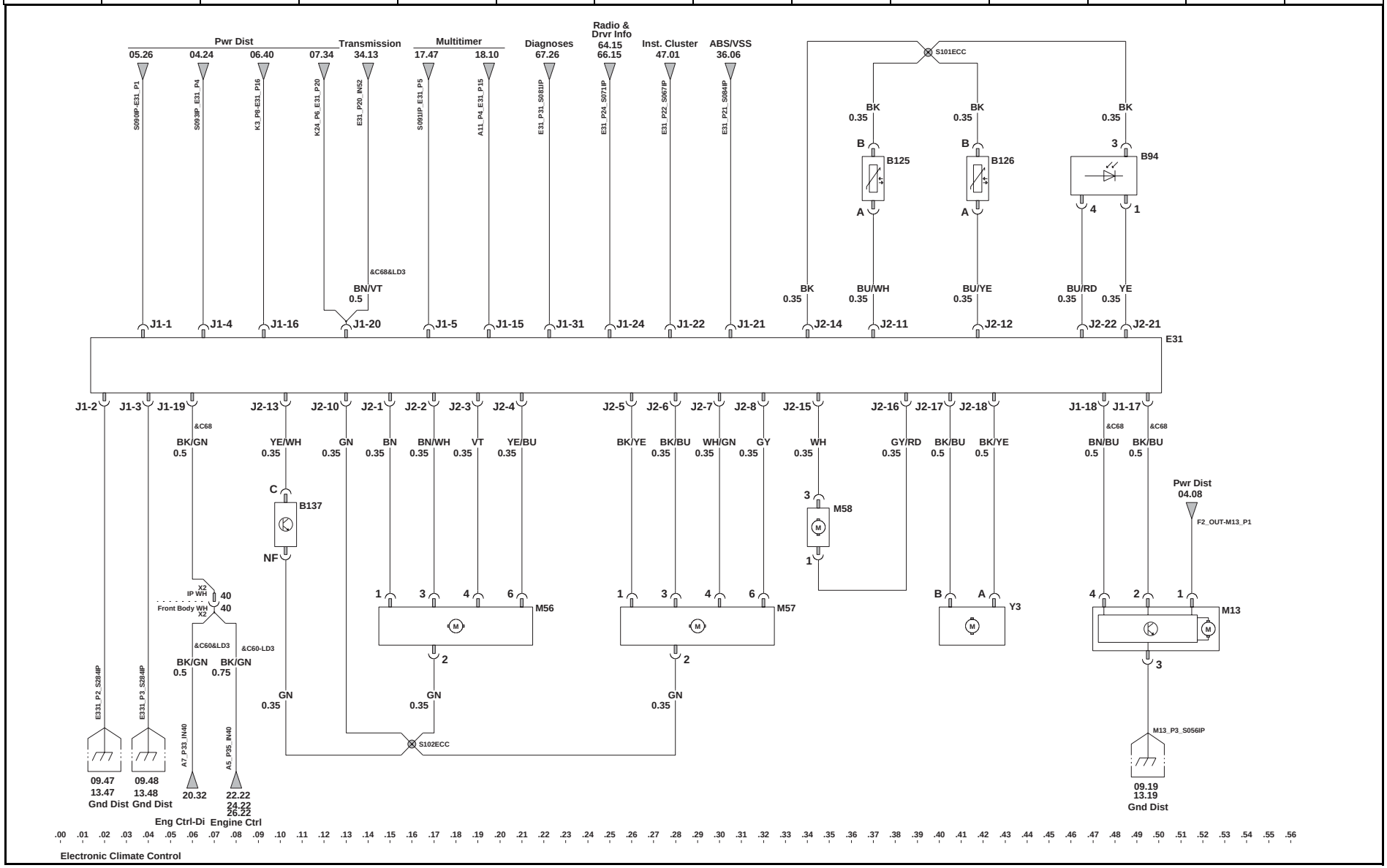

Cores - Fios / Colores - Alambres / Wires - Colors													
PR= Preto	*MR = Marrom*	*AZ = Azul*	*CZ = Cinza*	*VD= Verde*	*ORN= Laranja*	*PNK = Rosa*	*VL= Violeta*	*VM = Vermelho*	*TAN= Beje*	*BR = Branco*	*AM= Amarelo*	*LT = Claro*	*DK = Escuro*
Negro / Black	*Marrón / Brown*	*Azul / Blue*	*Gris / Gray*	*Verde / Green*	*Naranja /Orange*	*Rosa / Pink*	*Violeta / Purple*	*Rojo / Red*	*Beije / Tan*	*Blanco / White*	*Amarillo / Yellow*	*Claro / Light*	*Oscuro / Dark*

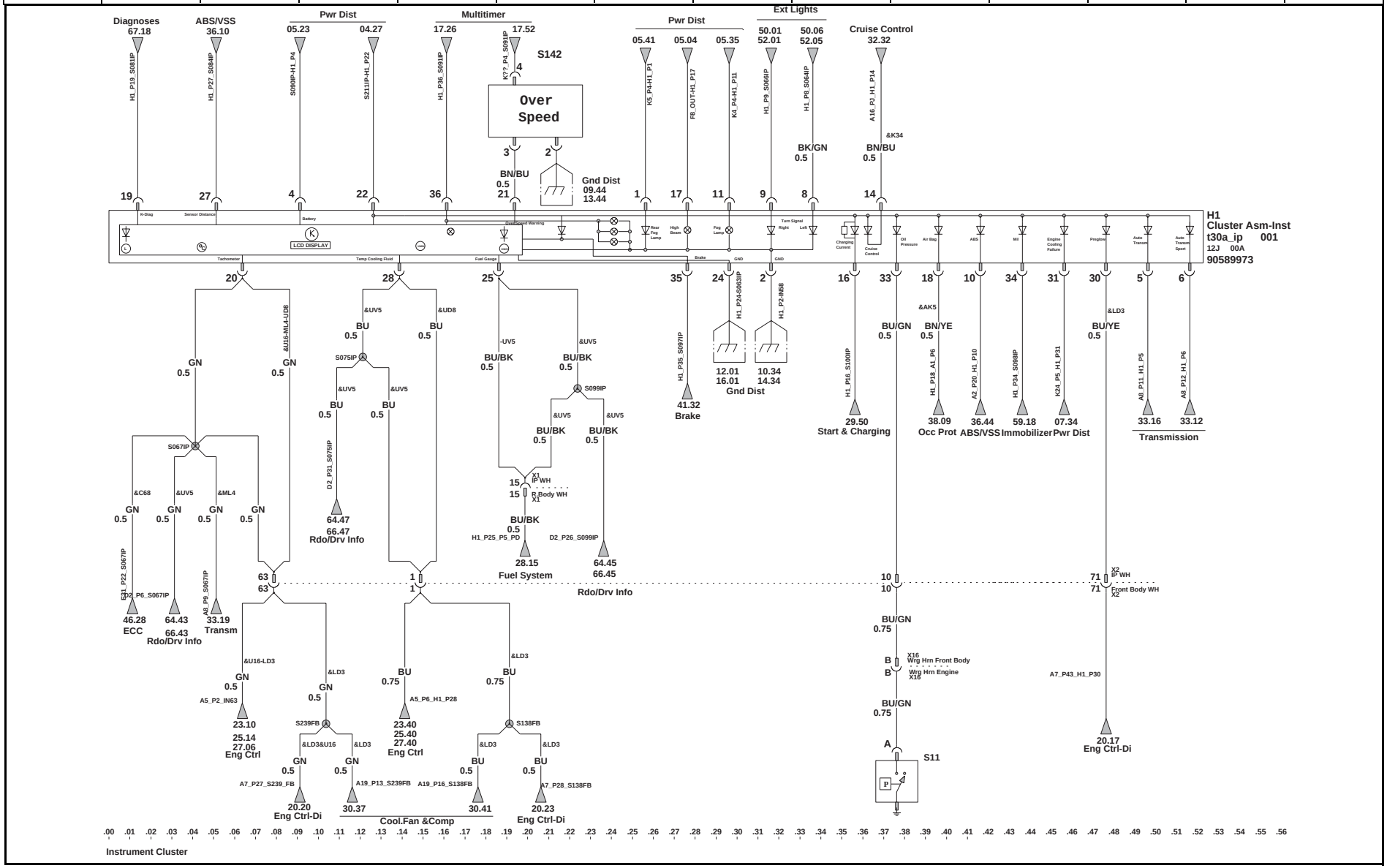

Cores - Fios / Colores - Alambres / Wires - Colors													
PR= Preto	MR = Marrom	AZ = Azul	CZ = Cinza	VD= Verde	*ORN= Laranja*	*PNK = Rosa*	*VL= Violeta*	*VM = Vermelho*	*TAN= Beje*	*BR = Branco*	*AM= Amarelo*	*LT = Claro*	*DK = Escuro*
Negro / Black	*Marrón / Brown*	*Azul / Blue*	*Gris / Gray*	*Verde / Green*	*Naranja /Orange*	*Rosa / Pink*	*Violeta / Purple*	*Rojo / Red*	*Beije / Tan*	*Blanco / White*	*Amarillo / Yellow*	*Claro / Light*	*Oscuro / Dark*

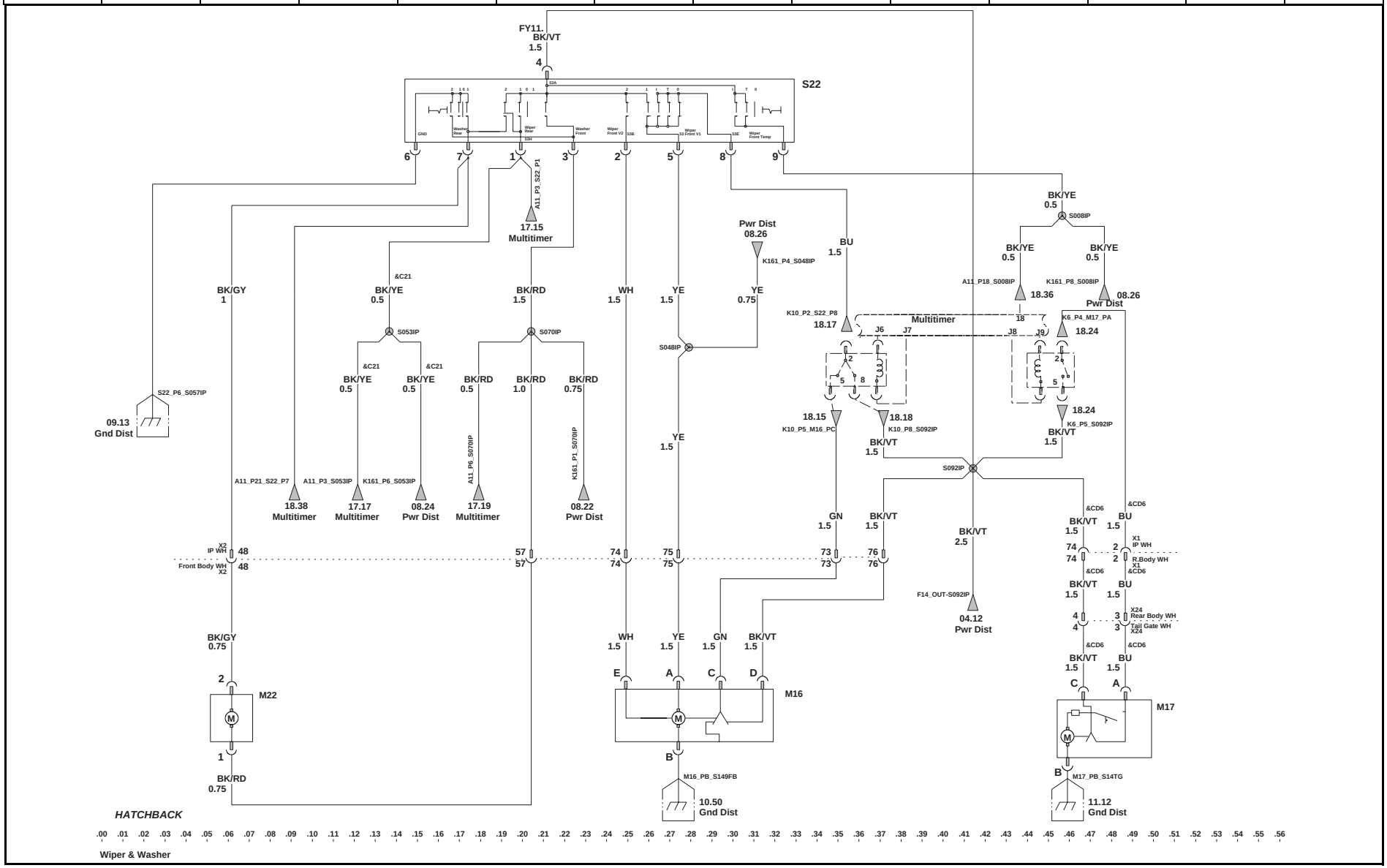

Cores - Fios / Colores - Alambres / Wires - Colors													
PR= Preto	MR = Marrom	AZ = Azul	CZ = Cinza	VD= Verde	*ORN= Laranja*	*PNK = Rosa*	*VL= Violeta*	*VM = Vermelho*	*TAN= Beje*	*BR = Branco*	*AM= Amarelo*	*LT = Claro*	*DK = Escuro*
Negro / Black	*Marrón / Brown*	*Azul / Blue*	*Gris / Gray*	*Verde / Green*	*Naranja /Orange*	*Rosa / Pink*	*Violeta / Purple*	*Rojo / Red*	*Beije / Tan*	*Blanco / White*	*Amarillo / Yellow*	*Claro / Light*	*Oscuro / Dark*

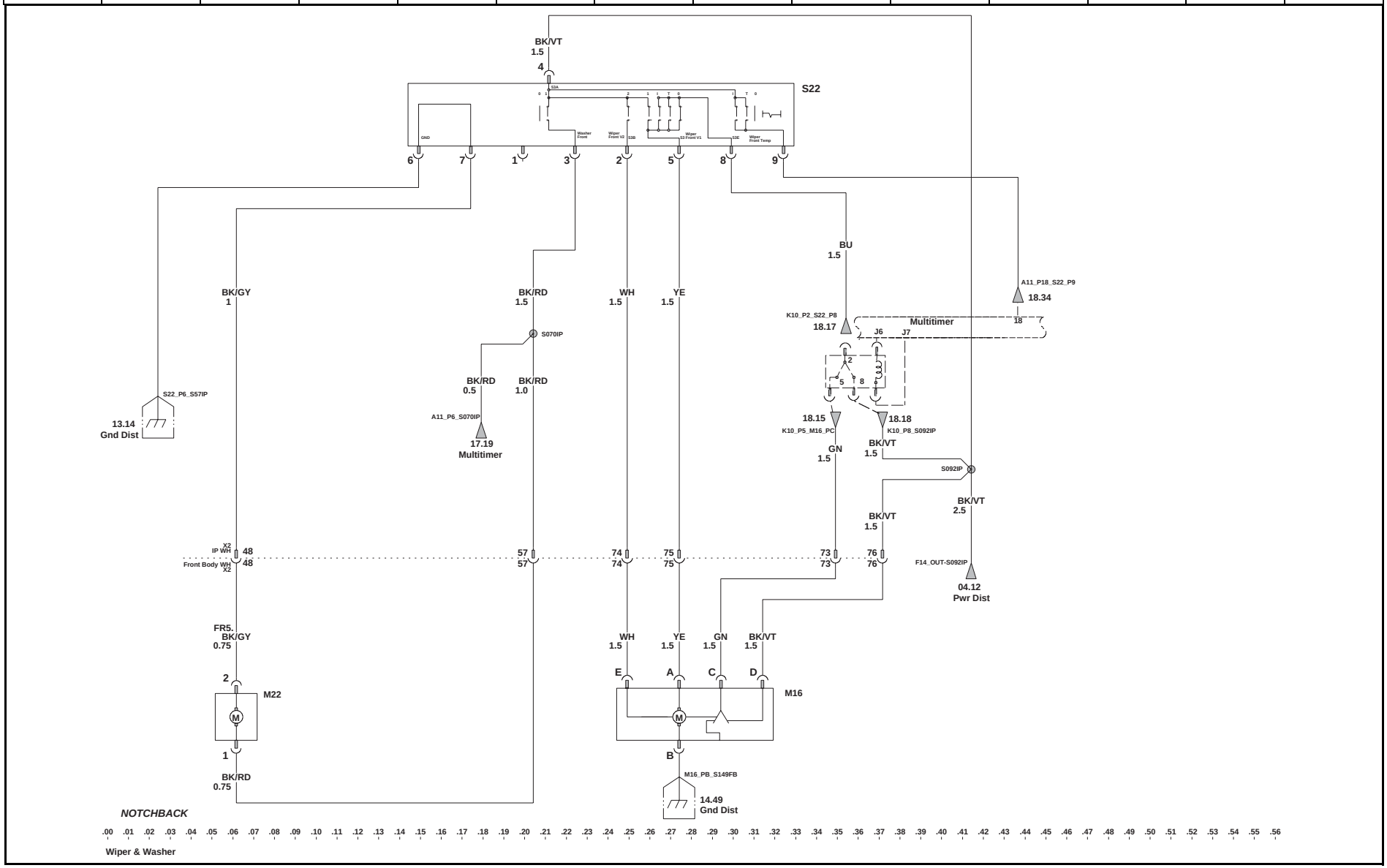

Cores - Fios / Colores - Alambres / Wires - Colors													
PR= Preto	***MR = Marrom***	***AZ = Azul***	***CZ = Cinza***	***VD= Verde***	***ORN= Laranja***	***PNK = Rosa***	***VL= Violeta***	***VM = Vermelho***	***TAN= Beje***	***BR = Branco***	***AM= Amarelo***	***LT = Claro***	***DK = Escuro***
Negro / Black	*Marrón / Brown*	*Azul / Blue*	*Gris / Gray*	*Verde / Green*	*Naranja /Orange*	*Rosa / Pink*	*Violeta / Purple*	*Rojo / Red*	*Beije / Tan*	*Blanco / White*	*Amarillo / Yellow*	*Claro / Light*	*Oscuro / Dark*

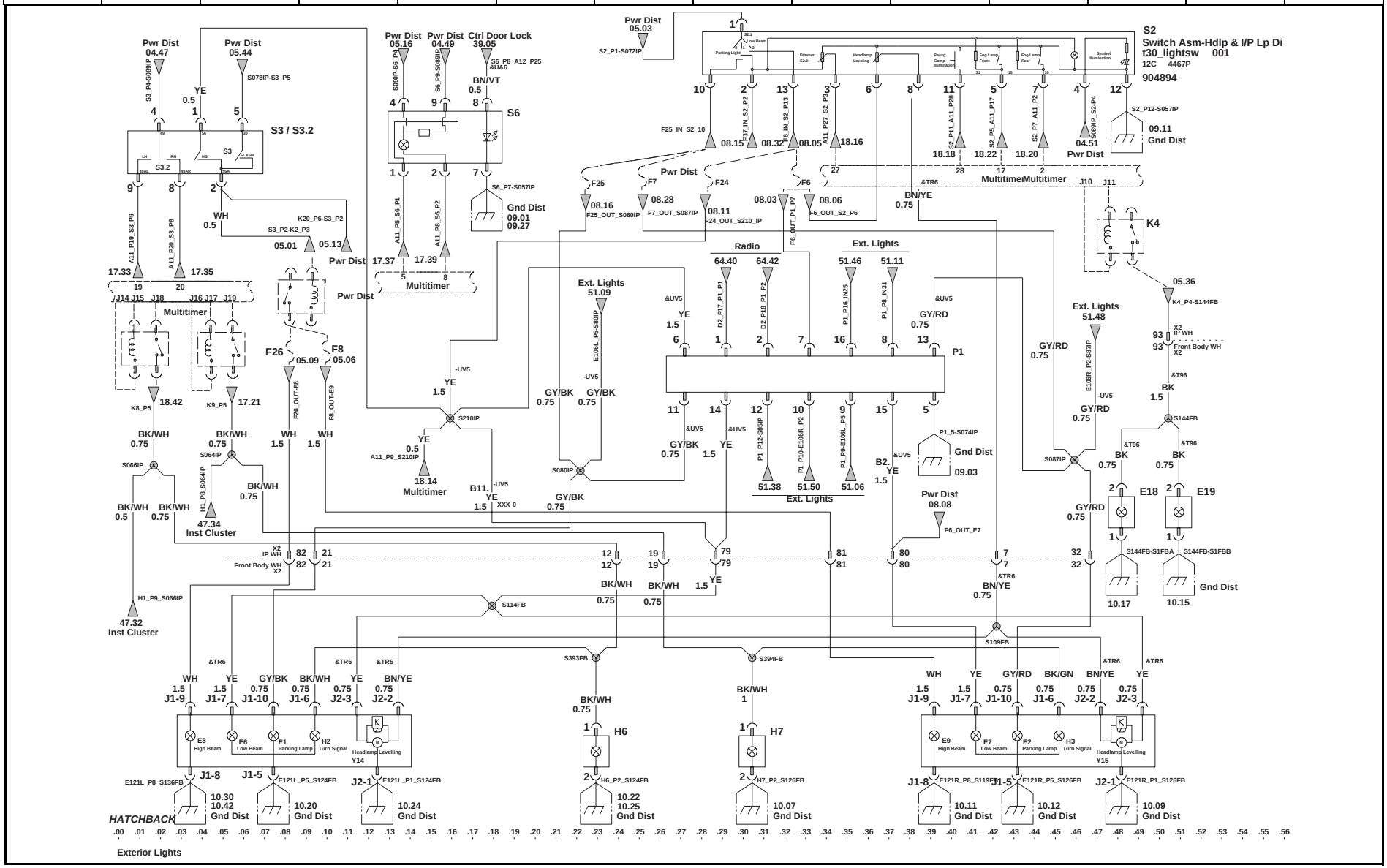

Cores - Fios / Colores - Alambres / Wires - Colors													
PR= Preto	MR = Marrom	AZ = Azul	CZ = Cinza	VD= Verde	*ORN= Laranja*	*PNK = Rosa*	*VL= Violeta*	*VM = Vermelho*	*TAN= Beje*	*BR = Branco*	*AM= Amarelo*	*LT = Claro*	*DK = Escuro*
Negro / Black	*Marrón / Brown*	*Azul / Blue*	*Gris / Gray*	*Verde / Green*	*Naranja /Orange*	*Rosa / Pink*	*Violeta / Purple*	*Rojo / Red*	*Beije / Tan*	*Blanco / White*	*Amarillo / Yellow*	*Claro / Light*	*Oscuro / Dark*

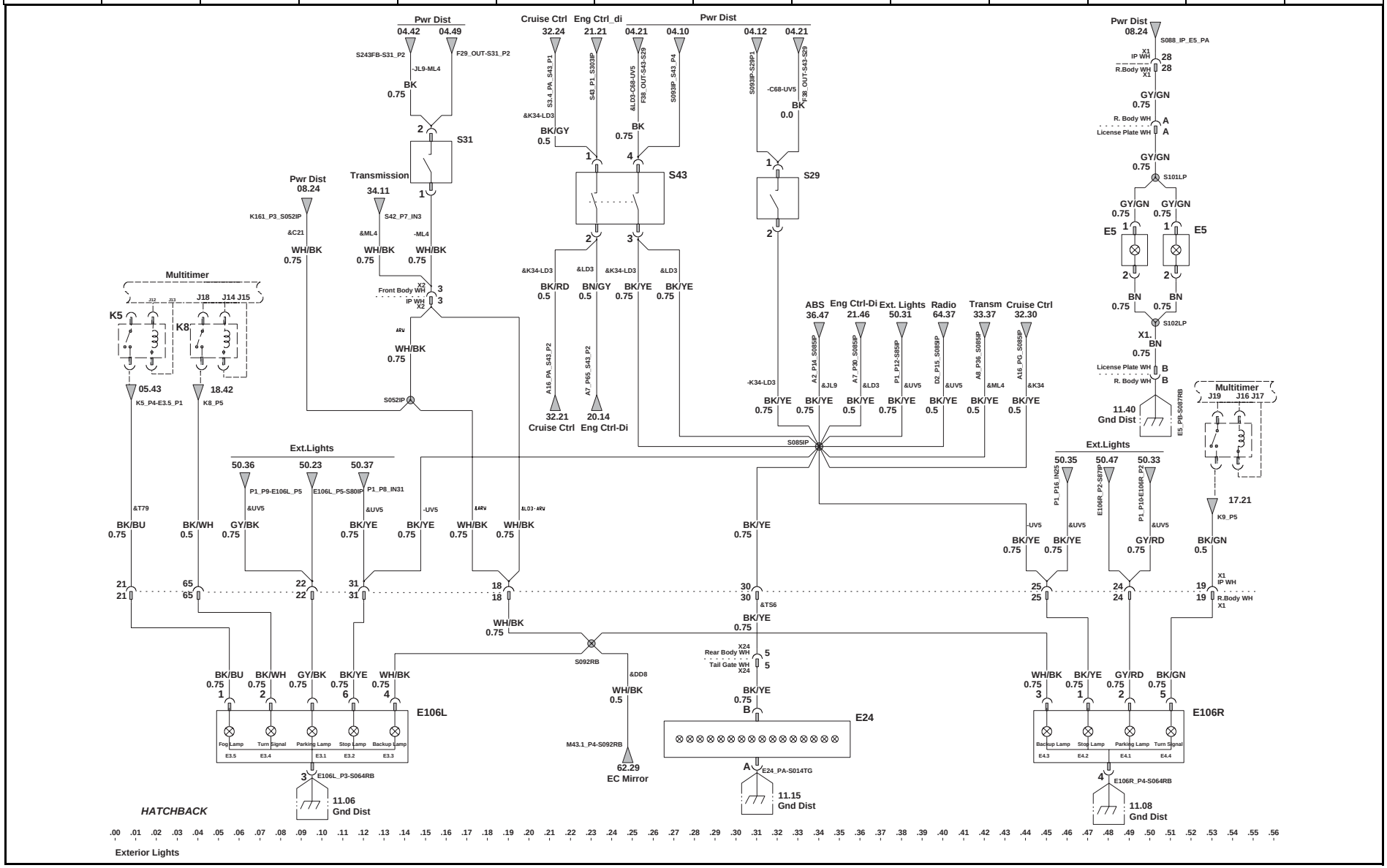

Cores - Fios / Colores - Alambres / Wires - Colors													
PR= Preto	***MR = Marrom***	***AZ = Azul***	***CZ = Cinza***	***VD= Verde***	***ORN= Laranja***	***PNK = Rosa***	***VL= Violeta***	***VM = Vermelho***	***TAN= Beje***	***BR = Branco***	***AM= Amarelo***	***LT = Claro***	***DK = Escuro***
Negro / Black	*Marrón / Brown*	*Azul / Blue*	*Gris / Gray*	*Verde / Green*	*Naranja /Orange*	*Rosa / Pink*	*Violeta / Purple*	*Rojo / Red*	*Beije / Tan*	*Blanco / White*	*Amarillo / Yellow*	*Claro / Light*	*Oscuro / Dark*

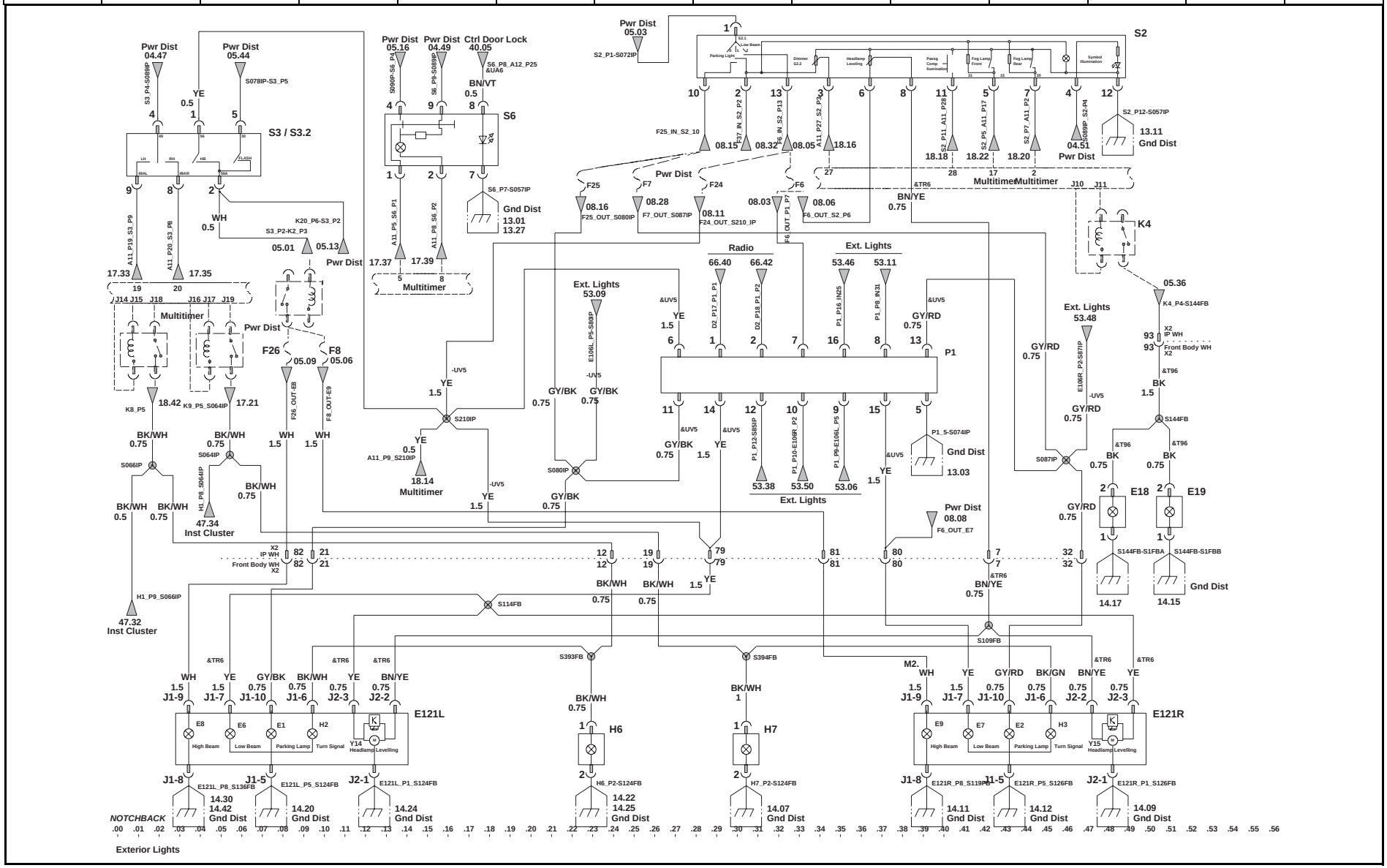

Cores - Fios / Colores - Alambres / Wires - Colors													
PR= Preto	***MR = Marrom***	***AZ = Azul***	***CZ = Cinza***	***VD= Verde***	***ORN= Laranja***	***PNK = Rosa***	***VL= Violeta***	***VM = Vermelho***	***TAN= Beje***	***BR = Branco***	***AM= Amarelo***	***LT = Claro***	***DK = Escuro***
Negro / Black	*Marrón / Brown*	*Azul / Blue*	*Gris / Gray*	*Verde / Green*	*Naranja /Orange*	*Rosa / Pink*	*Violeta / Purple*	*Rojo / Red*	*Beije / Tan*	*Blanco / White*	*Amarillo / Yellow*	*Claro / Light*	*Oscuro / Dark*

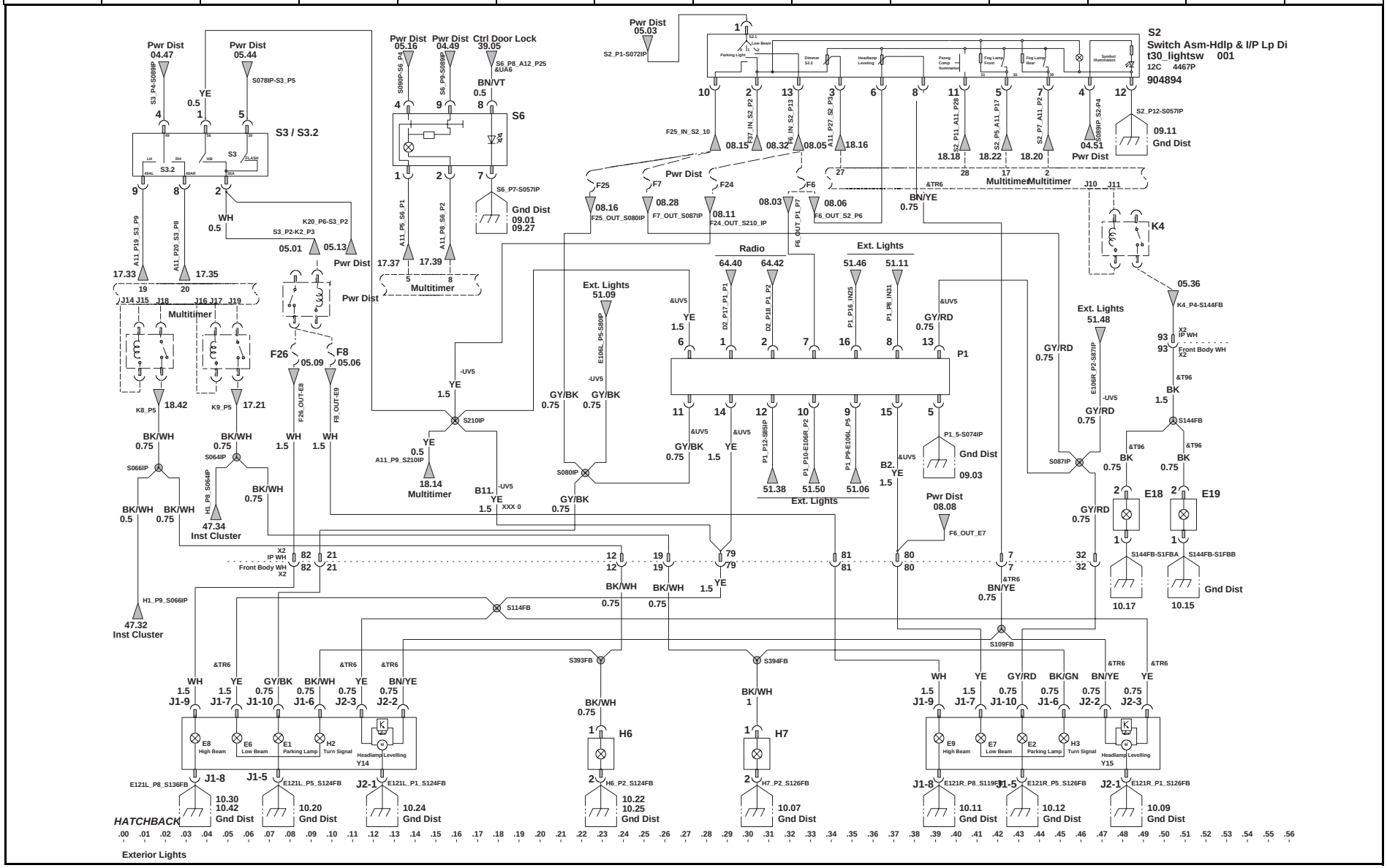

Cores - Fios / Colores - Alambres / Wires - Colors													
PR= Preto	MR = Marrom	AZ = Azul	CZ = Cinza	VD= Verde	*ORN= Laranja*	*PNK = Rosa*	*VL= Violeta*	*VM = Vermelho*	*TAN= Beje*	*BR = Branco*	*AM= Amarelo*	*LT = Claro*	*DK = Escuro*
Negro / Black	*Marrón / Brown*	*Azul / Blue*	*Gris / Gray*	*Verde / Green*	*Naranja /Orange*	*Rosa / Pink*	*Violeta / Purple*	*Rojo / Red*	*Beije / Tan*	*Blanco / White*	*Amarillo / Yellow*	*Claro / Light*	*Oscuro / Dark*

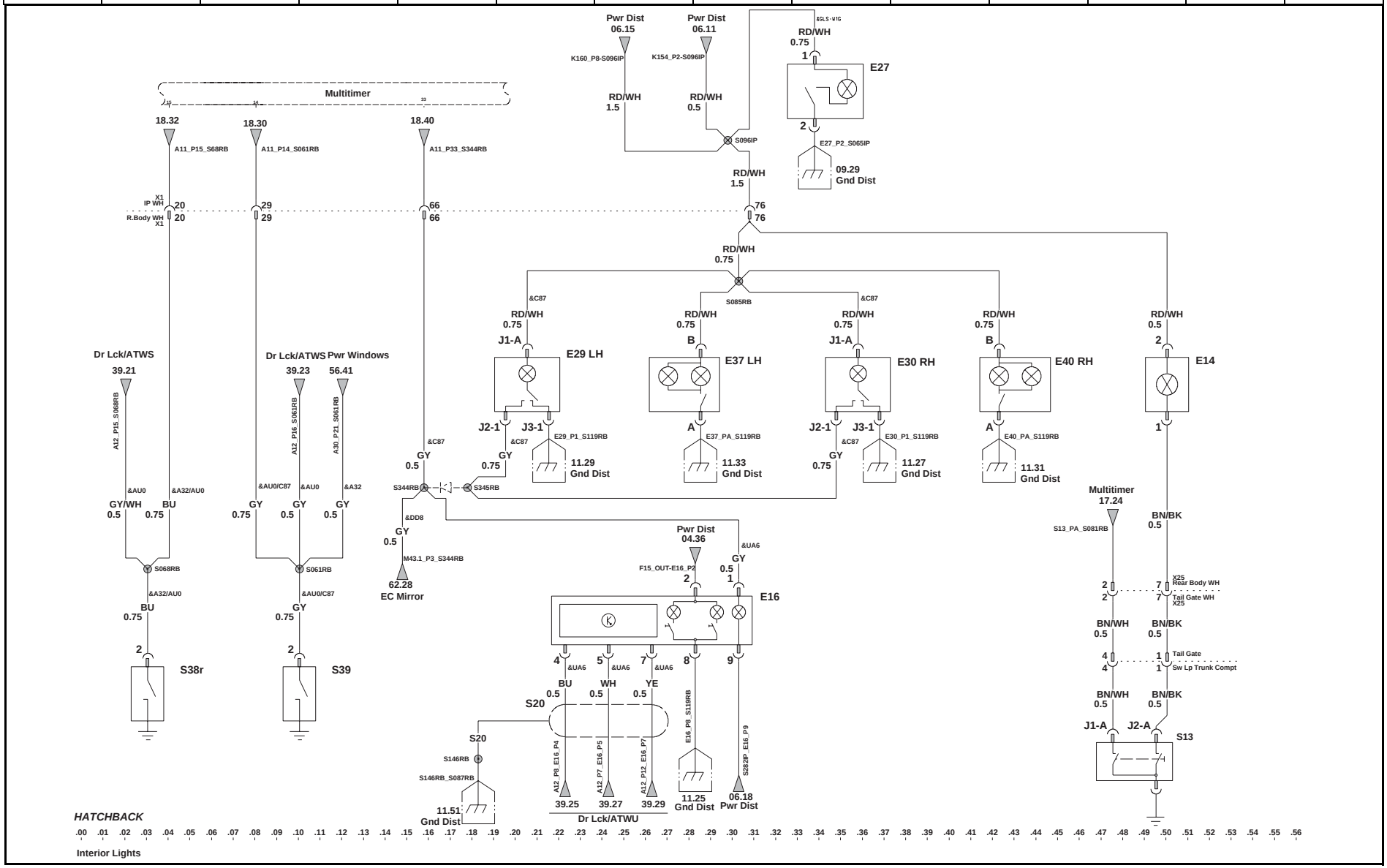

Cores - Fios / Colores - Alambres / Wires - Colors													
PR= Preto	MR = Marrom	AZ = Azul	CZ = Cinza	VD= Verde	*ORN= Laranja*	*PNK = Rosa*	*VL= Violeta*	*VM = Vermelho*	*TAN= Beje*	*BR = Branco*	*AM= Amarelo*	*LT = Claro*	*DK = Escuro*
Negro / Black	*Marrón / Brown*	*Azul / Blue*	*Gris / Gray*	*Verde / Green*	*Naranja /Orange*	*Rosa / Pink*	*Violeta / Purple*	*Rojo / Red*	*Beije / Tan*	*Blanco / White*	*Amarillo / Yellow*	*Claro / Light*	*Oscuro / Dark*

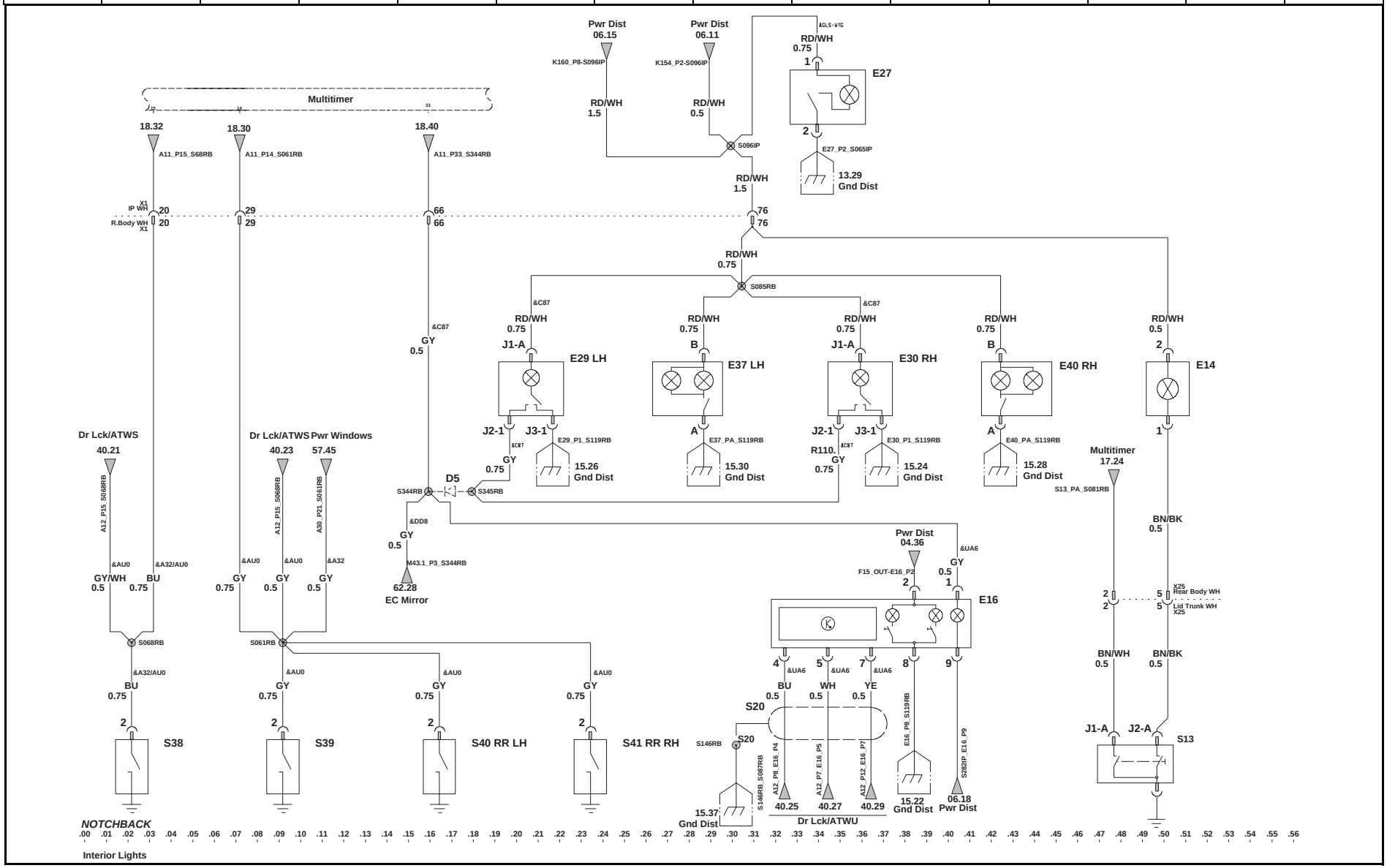

Cores - Fios / Colores - Alambres / Wires - Colors													
PR= Preto	*MR = Marrom*	*AZ = Azul*	*CZ = Cinza*	*VD= Verde*	*ORN= Laranja*	*PNK = Rosa*	*VL= Violeta*	*VM = Vermelho*	*TAN= Beje*	*BR = Branco*	*AM= Amarelo*	*LT = Claro*	*DK = Escuro*
Negro / Black	Marrón / Brown	Azul / Blue	Gris / Gray	Verde / Green	Naranja /Orange	Rosa / Pink	Violeta / Purple	Rojo / Red	Beije / Tan	Blanco / White	Amarillo / Yellow	Claro / Light	Oscuro / Dark

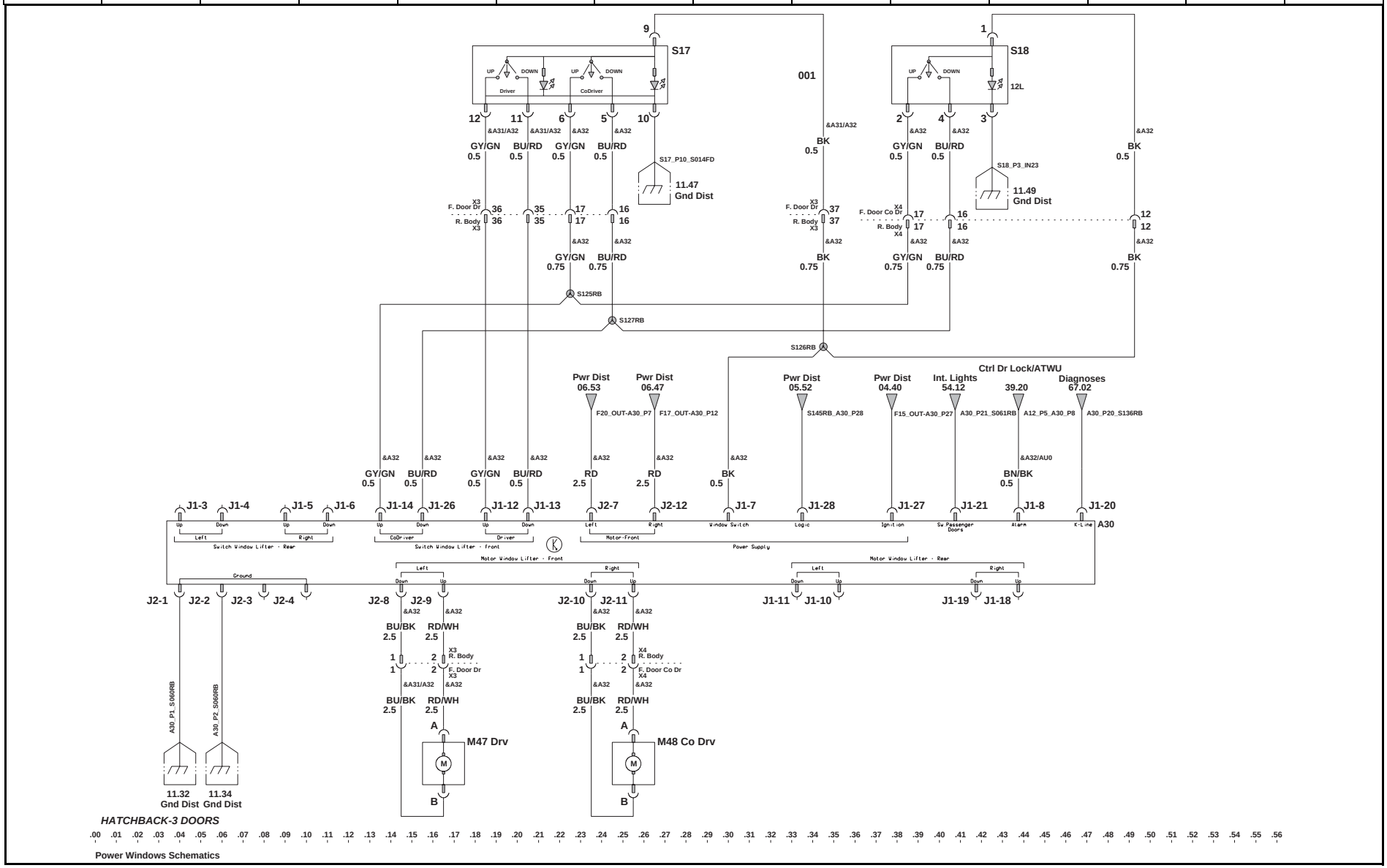

Power Windows Schematics

Cores - Fios / Colores - Alambres / Wires - Colors													
PR= Preto	***MR = Marrom***	***AZ = Azul***	***CZ = Cinza***	***VD= Verde***	***ORN= Laranja***	***PNK = Rosa***	***VL= Violeta***	***VM = Vermelho***	***TAN= Beje***	***BR = Branco***	***AM= Amarelo***	***LT = Claro***	***DK = Escuro***
Negro / Black	*Marrón / Brown*	*Azul / Blue*	*Gris / Gray*	*Verde / Green*	*Naranja /Orange*	*Rosa / Pink*	*Violeta / Purple*	*Rojo / Red*	*Beije / Tan*	*Blanco / White*	*Amarillo / Yellow*	*Claro / Light*	*Oscuro / Dark*

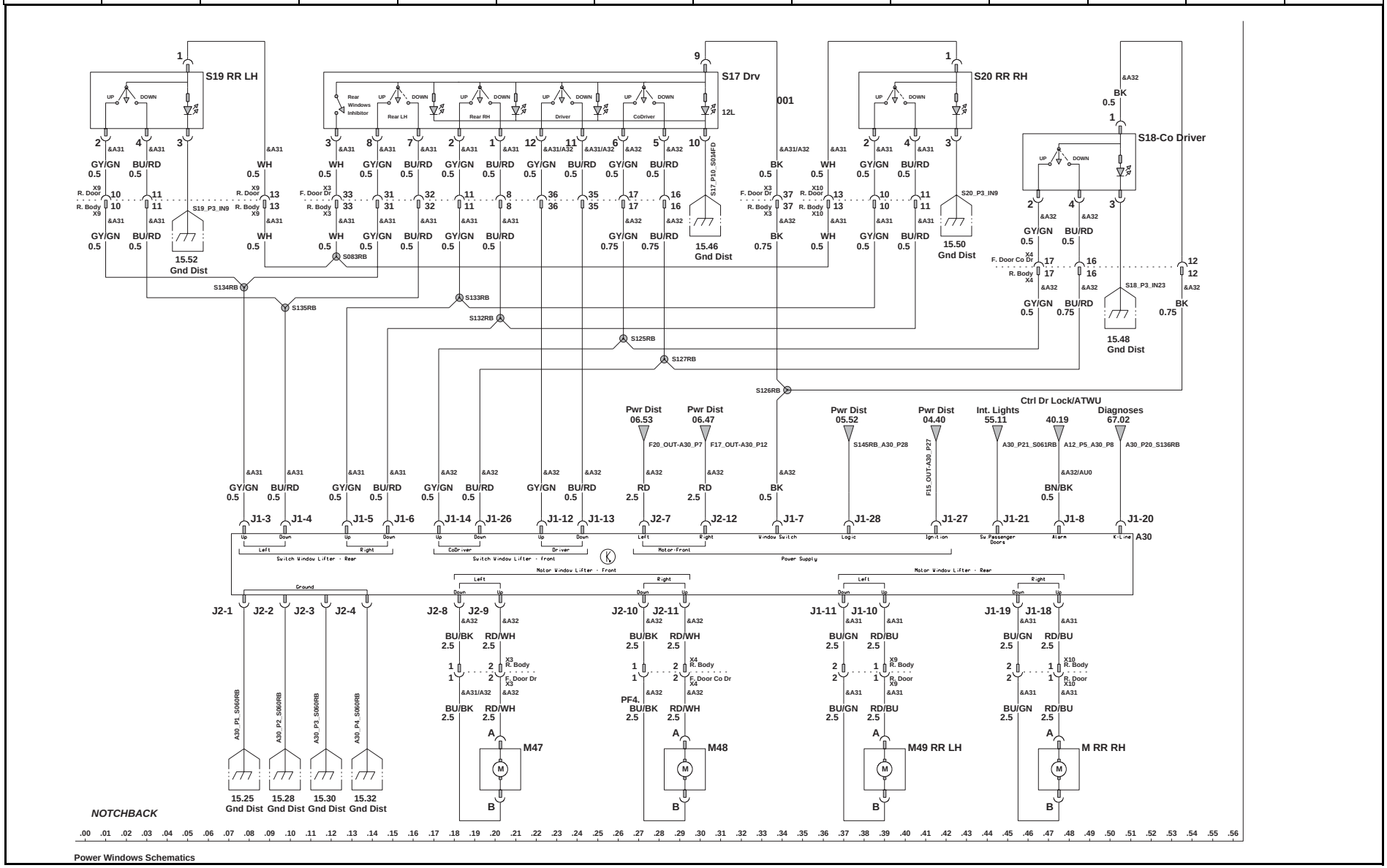

Power Windows Schematics

Cores - Fios / Colores - Alambres / Wires - Colors													
PR= Preto *Negro / Black*	**MR = Marrom** *Marrón / Brown*	**AZ = Azul** *Azul / Blue*	**CZ = Cinza** *Gris / Gray*	**VD= Verde** *Verde / Green*	***ORN= Laranja*** *Naranja /Orange*	***PNK = Rosa*** *Rosa / Pink*	***VL= Violeta*** *Violeta / Purple*	***VM = Vermelho*** *Rojo / Red*	***TAN= Beje*** *Beije / Tan*	***BR = Branco*** *Blanco / White*	***AM= Amarelo*** *Amarillo / Yellow*	***LT = Claro*** *Claro / Light*	***DK = Escuro*** *Oscuro / Dark*

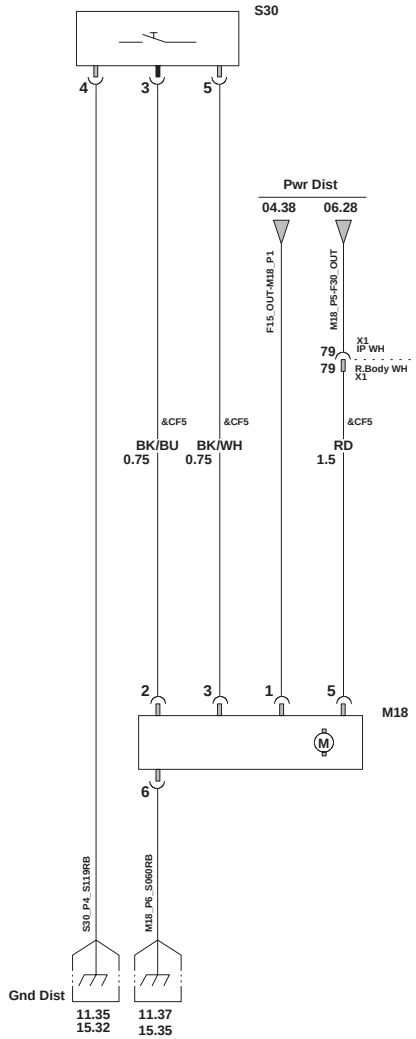

.00 .01 .02 .03 .04 .05 .06 .07 .08 .09 .10 .11 .12 .13 .14 .15 .16 .17 .18 .19 .20 .21 .22 .23 .24 .25 .26 .27 .28 .29 .30 .31 .32 .33 .34 .35 .36 .37 .38 .39 .40 .41 .42 .43 .44 .45 .46 .47 .48 .49 .50 .51 .52 .53 .54 .55 .56

Power Sunroof Schematics

Cores - Fios / Colores - Alambres / Wires - Colors													
PR= Preto Negro / Black	MR = Marrom Marrón / Brown	AZ = Azul Azul / Blue	CZ = Cinza Gris / Gray	VD= Verde Verde / Green	*ORN= Laranja* Naranja /Orange	*PNK = Rosa* Rosa / Pink	*VL= Violeta* Violeta / Purple	*VM = Vermelho* Rojo / Red	*TAN= Beje* Beije / Tan	*BR = Branco* Blanco / White	*AM= Amarelo* Amarillo / Yellow	*LT = Claro* Claro / Light	*DK = Escuro* Oscuro / Dark

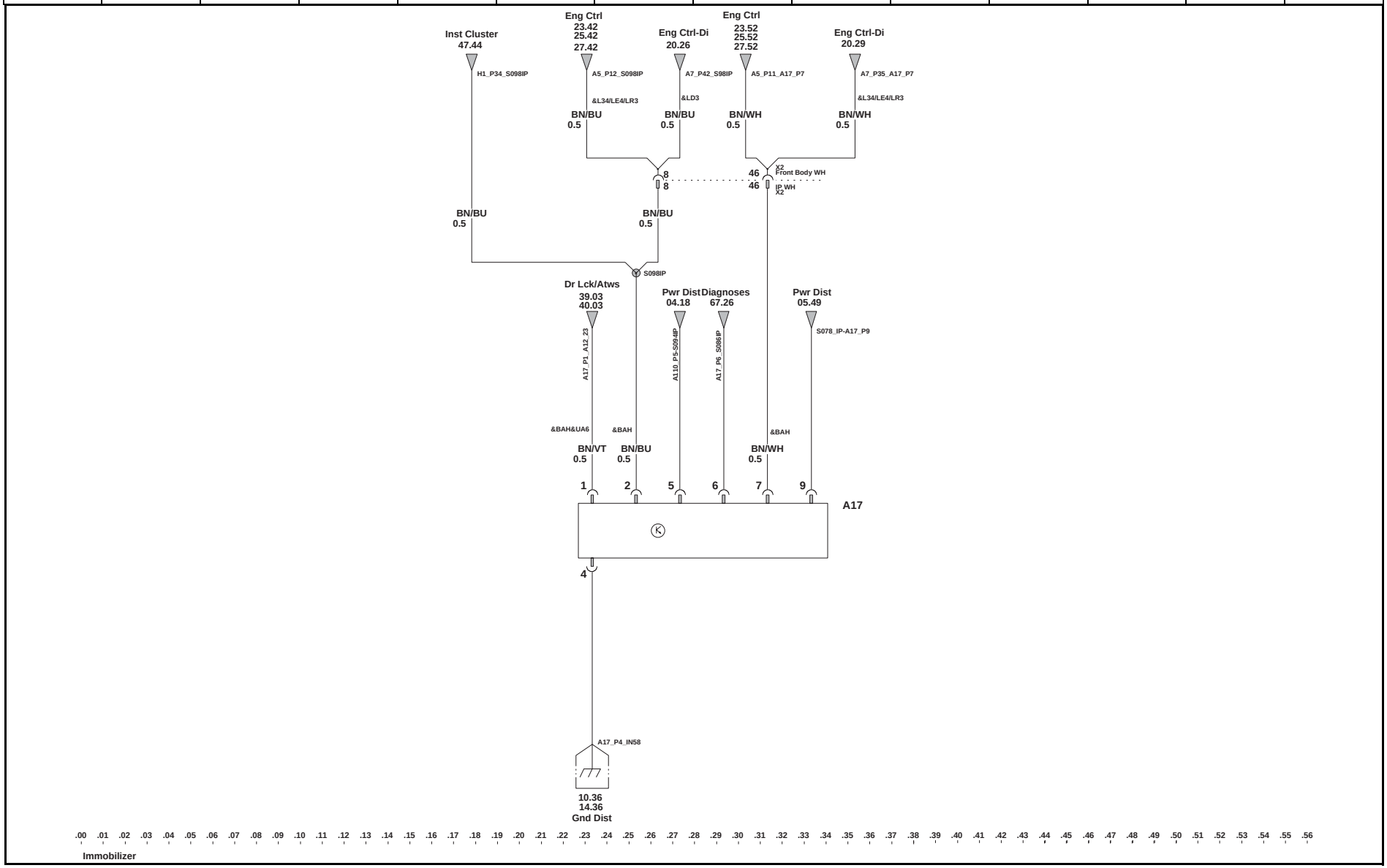

Cores - Fios / Colores - Alambres / Wires - Colors													
PR= Preto Negro / Black	MR = Marrom Marrón / Brown	AZ = Azul Azul / Blue	CZ = Cinza Gris / Gray	VD= Verde Verde / Green	*ORN= Laranja* Naranja /Orange	*PNK = Rosa* Rosa / Pink	*VL= Violeta* Violeta / Purple	*VM = Vermelho* Rojo / Red	*TAN= Beje* Beije / Tan	*BR = Branco* Blanco / White	*AM= Amarelo* Amarillo / Yellow	*LT = Claro* Claro / Light	*DK = Escuro* Oscuro / Dark

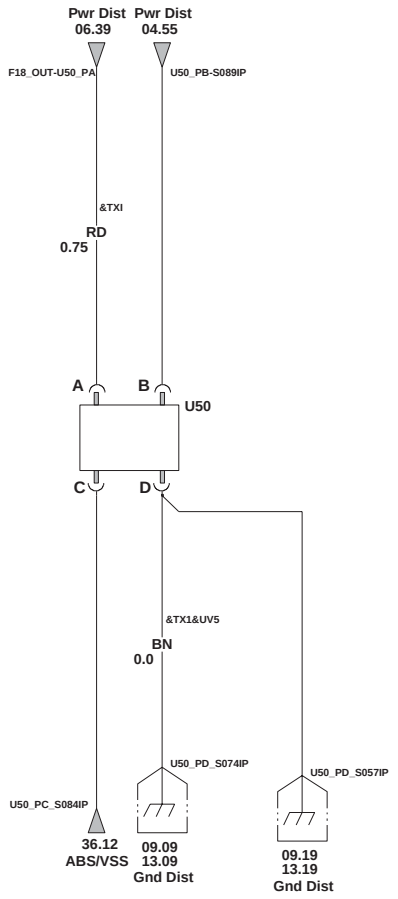

.00 .01 .02 .03 .04 .05 .06 .07 .08 .09 .10 .11 .12 .13 .14 .15 .16 .17 .18 .19 .20 .21 .22 .23 .24 .25 .26 .27 .28 .29 .30 .31 .32 .33 .34 .35 .36 .37 .38 .39 .40 .41 .42 .43 .44 .45 .46 .47 .48 .49 .50 .51 .52 .53 .54 .55 .56

Taximeter Schematics

Cores - Fios / Colores - Alambres / Wires - Colors													
PR= Preto	MR = Marrom	AZ = Azul	CZ = Cinza	VD= Verde	*ORN= Laranja*	*PNK = Rosa*	*VL= Violeta*	*VM = Vermelho*	*TAN= Beje*	*BR = Branco*	*AM= Amarelo*	*LT = Claro*	*DK = Escuro*
Negro / Black	*Marrón / Brown*	*Azul / Blue*	*Gris / Gray*	*Verde / Green*	*Naranja /Orange*	*Rosa / Pink*	*Violeta / Purple*	*Rojo / Red*	*Beije / Tan*	*Blanco / White*	*Amarillo / Yellow*	*Claro / Light*	*Oscuro / Dark*

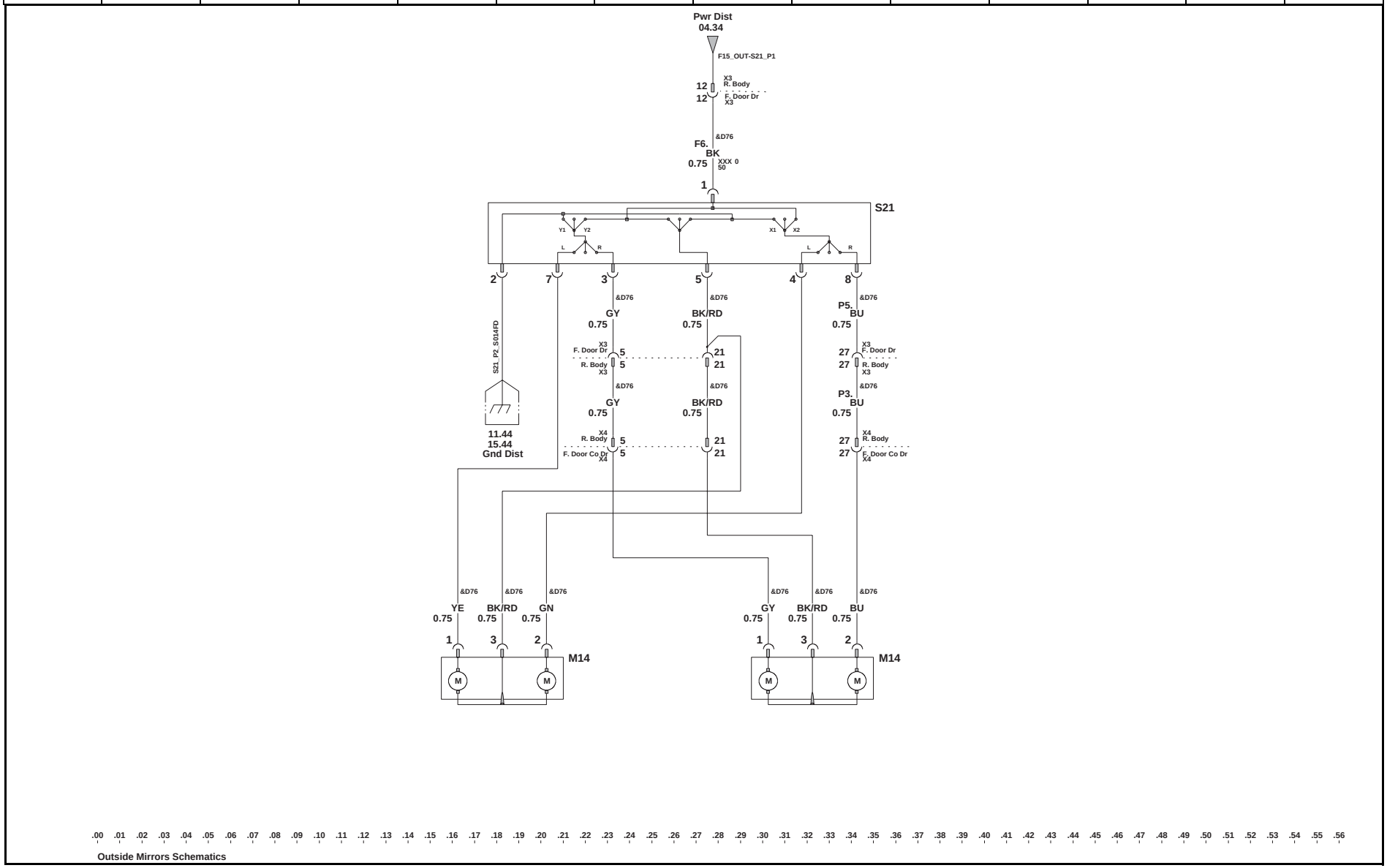

Outside Mirrors Schematics

Cores - Fios / Colores - Alambres / Wires - Colors												
PR= Preto *Negro / Black*	**MR = Marrom** *Marrón / Brown*	**AZ = Azul** *Azul / Blue*	**CZ = Cinza** *Gris / Gray*	**VD= Verde** *Verde / Green*	***ORN= Laranja*** *Naranja /Orange*	***PNK = Rosa*** *Rosa / Pink*	***VL= Violeta*** *Violeta / Purple*	***VM = Vermelho*** *Rojo / Red*	***TAN= Beje*** *Beije / Tan*	***BR = Branco*** *Blanco / White*	***AM= Amarelo*** *Amarillo / Yellow*	***LT = Claro*** *Claro / Light*	***DK = Escuro*** *Oscuro / Dark*

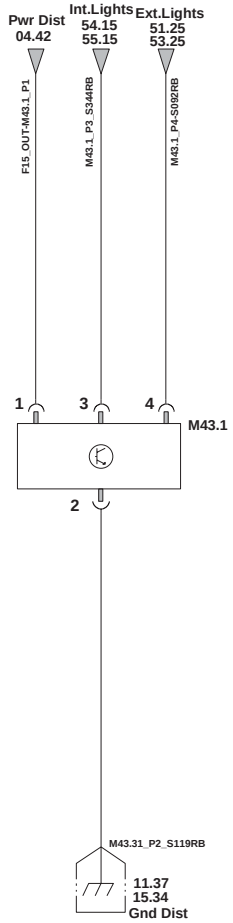

.00 .01 .02 .03 .04 .05 .06 .07 .08 .09 .10 .11 .12 .13 .14 .15 .16 .17 .18 .19 .20 .21 .22 .23 .24 .25 .26 .27 .28 .29 .30 .31 .32 .33 .34 .35 .36 .37 .38 .39 .40 .41 .42 .43 .44 .45 .46 .47 .48 .49 .50 .51 .52 .53 .54 .55 .56

EC Mirror

Cores - Fios / Colores - Alambres / Wires - Colors													
PR= Preto	MR = Marrom	AZ = Azul	CZ = Cinza	VD= Verde	*ORN= Laranja*	*PNK = Rosa*	*VL= Violeta*	*VM = Vermelho*	*TAN= Beje*	*BR = Branco*	*AM= Amarelo*	*LT = Claro*	*DK = Escuro*
Negro / Black	*Marrón / Brown*	*Azul / Blue*	*Gris / Gray*	*Verde / Green*	*Naranja /Orange*	*Rosa / Pink*	*Violeta / Purple*	*Rojo / Red*	*Beije / Tan*	*Blanco / White*	*Amarillo / Yellow*	*Claro / Light*	*Oscuro / Dark*

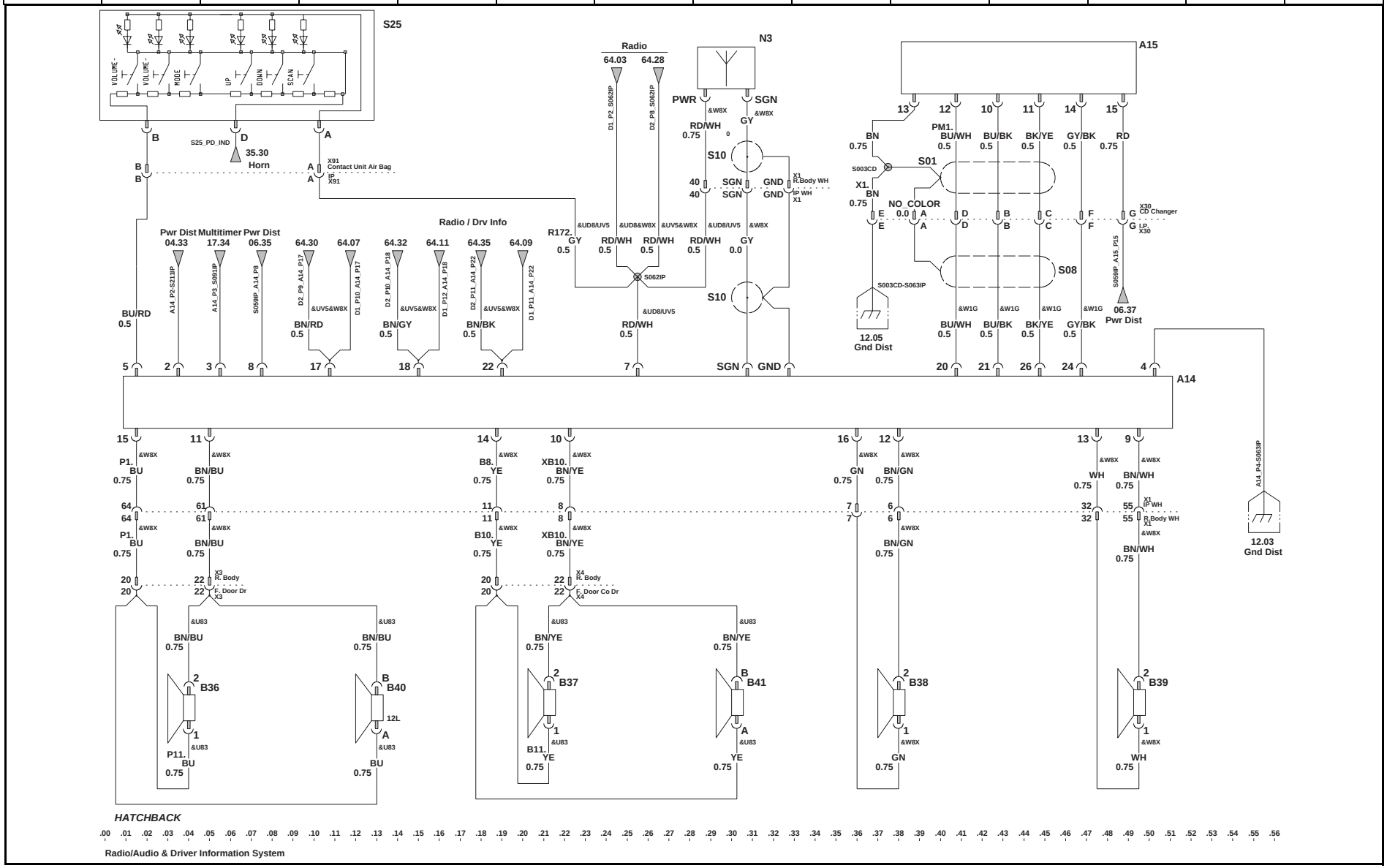

Cores - Fios / Colores - Alambres / Wires - Colors													
PR= Preto	MR = Marrom	AZ = Azul	CZ = Cinza	VD= Verde	*ORN= Laranja*	*PNK = Rosa*	*VL= Violeta*	*VM = Vermelho*	*TAN= Beje*	*BR = Branco*	*AM= Amarelo*	*LT = Claro*	*DK = Escuro*
Negro / Black	*Marrón / Brown*	*Azul / Blue*	*Gris / Gray*	*Verde / Green*	*Naranja /Orange*	*Rosa / Pink*	*Violeta / Purple*	*Rojo / Red*	*Beije / Tan*	*Blanco / White*	*Amarillo / Yellow*	*Claro / Light*	*Oscuro / Dark*

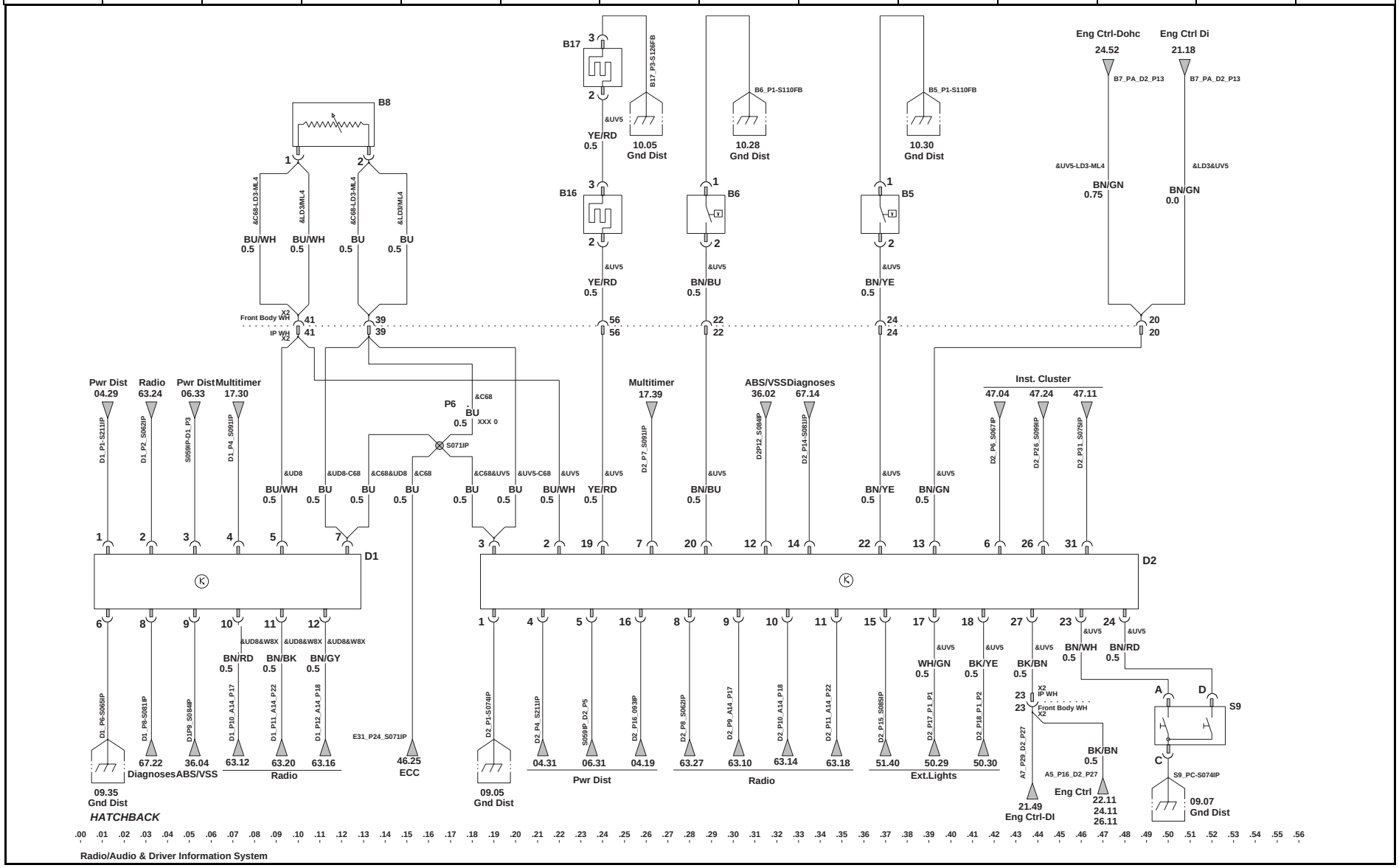

Cores - Fios / Colores - Alambres / Wires - Colors													
PR= Preto	***MR = Marrom***	***AZ = Azul***	***CZ = Cinza***	***VD= Verde***	***ORN= Laranja***	***PNK = Rosa***	***VL= Violeta***	***VM = Vermelho***	***TAN= Beje***	***BR = Branco***	***AM= Amarelo***	***LT = Claro***	***DK = Escuro***
Negro / Black	*Marrón / Brown*	*Azul / Blue*	*Gris / Gray*	*Verde / Green*	*Naranja /Orange*	*Rosa / Pink*	*Violeta / Purple*	*Rojo / Red*	*Beije / Tan*	*Blanco / White*	*Amarillo / Yellow*	*Claro / Light*	*Oscuro / Dark*

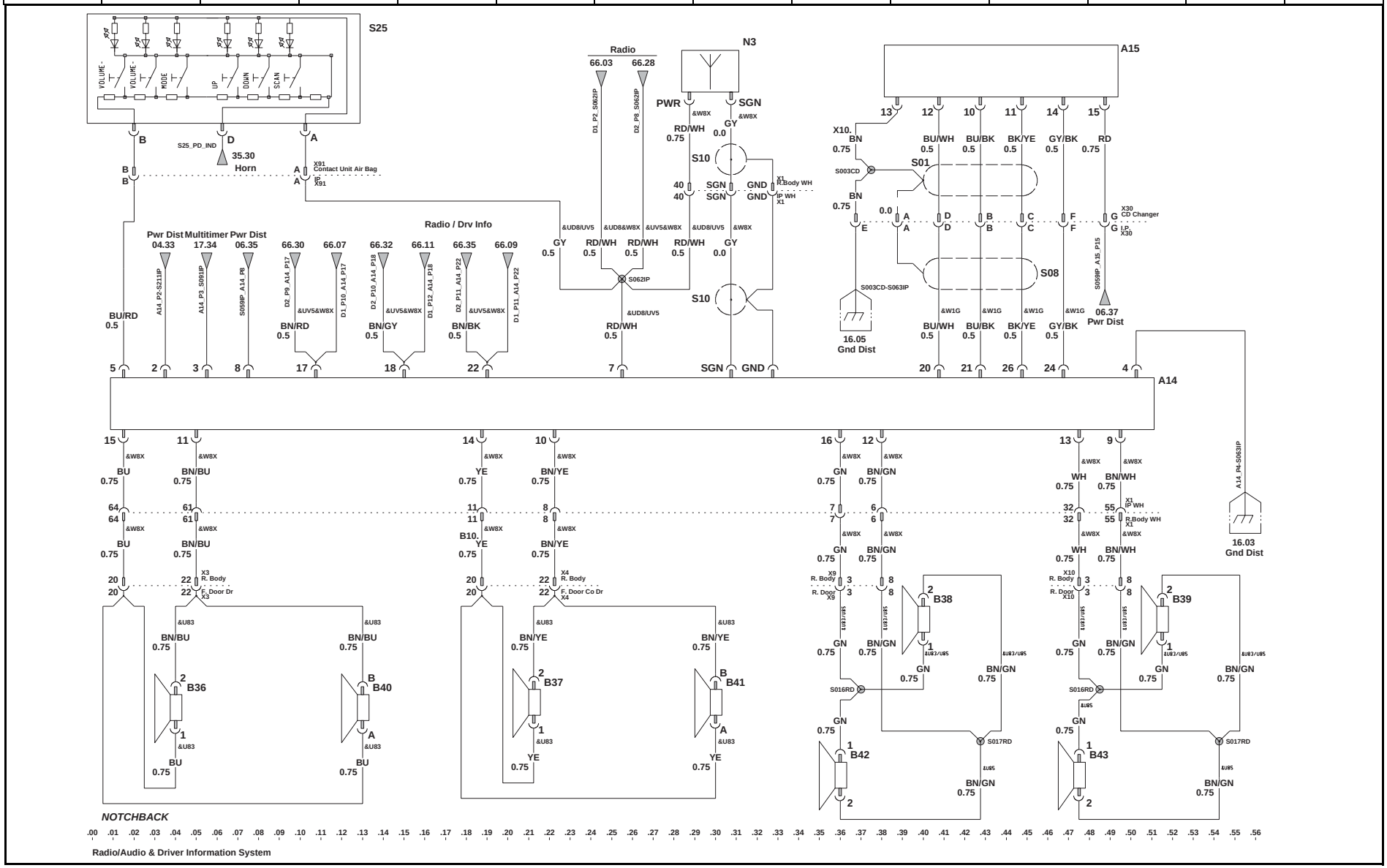

Cores - Fios / Colores - Alambres / Wires - Colors													
PR= Preto	MR = Marrom	AZ = Azul	CZ = Cinza	VD= Verde	*ORN= Laranja*	*PNK = Rosa*	*VL= Violeta*	*VM = Vermelho*	*TAN= Beje*	*BR = Branco*	*AM= Amarelo*	*LT = Claro*	*DK = Escuro*
Negro / Black	*Marrón / Brown*	*Azul / Blue*	*Gris / Gray*	*Verde / Green*	*Naranja /Orange*	*Rosa / Pink*	*Violeta / Purple*	*Rojo / Red*	*Beije / Tan*	*Blanco / White*	*Amarillo / Yellow*	*Claro / Light*	*Oscuro / Dark*

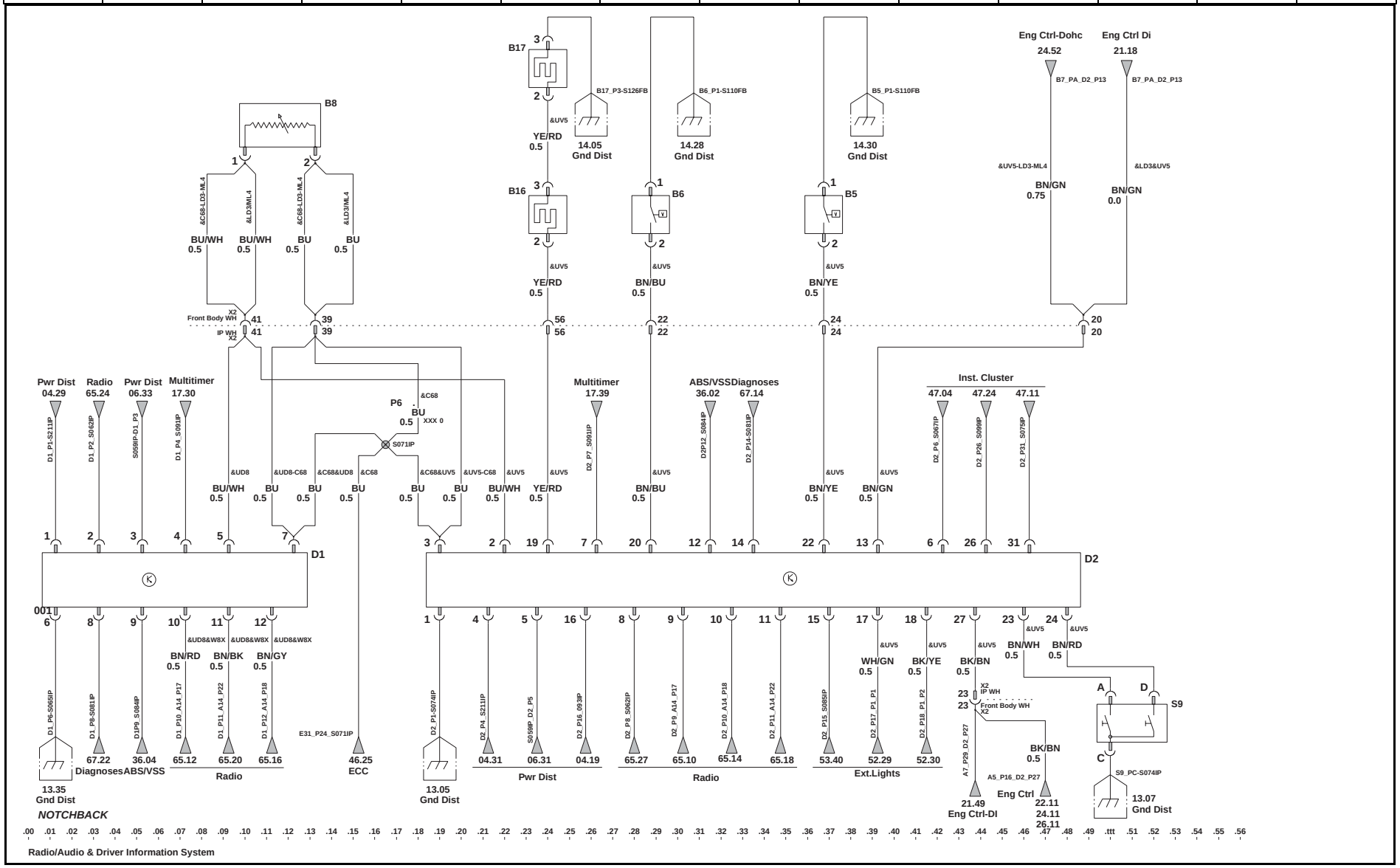

Cores - Fios / Colores - Alambres / Wires - Colors													
PR= Preto Negro / Black	MR = Marrom Marrón / Brown	AZ = Azul Azul / Blue	CZ = Cinza Gris / Gray	VD= Verde Verde / Green	*ORN= Laranja* Naranja /Orange	*PNK = Rosa* Rosa / Pink	*VL= Violeta* Violeta / Purple	*VM = Vermelho* Rojo / Red	*TAN= Beje* Beije / Tan	*BR = Branco* Blanco / White	*AM= Amarelo* Amarillo / Yellow	*LT = Claro* Claro / Light	*DK = Escuro* Oscuro / Dark

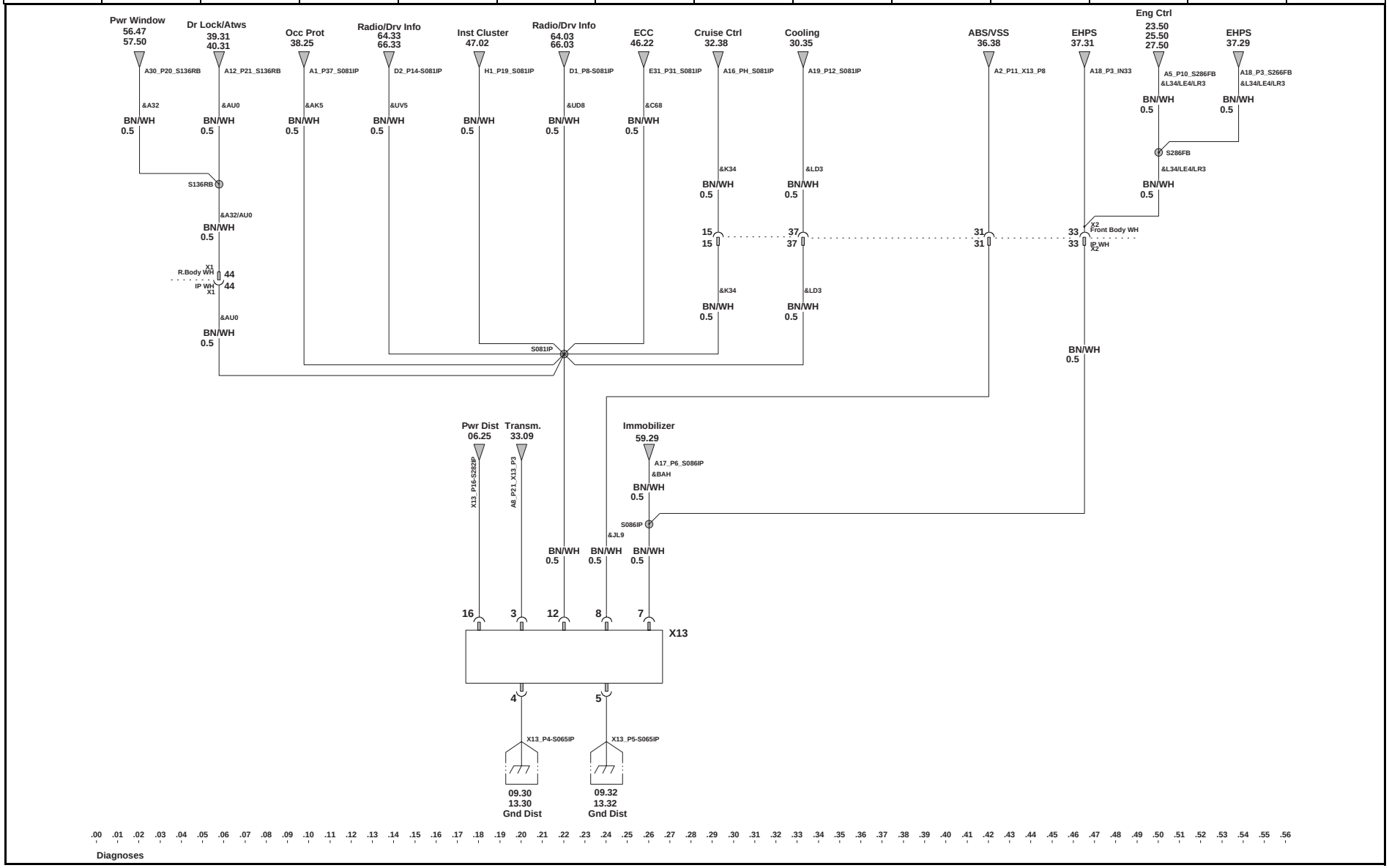

Cores - Fios / Colores - Alambres / Wires - Colors													
PR= Preto	**MR = Marrom**	**AZ = Azul**	**CZ = Cinza**	**VD= Verde**	***ORN= Laranja***	***PNK = Rosa***	***VL= Violeta***	***VM = Vermelho***	***TAN= Beje***	***BR = Branco***	***AM= Amarelo***	***LT = Claro***	***DK = Escuro***
Negro / Black	*Marrón / Brown*	*Azul / Blue*	*Gris / Gray*	*Verde / Green*	*Naranja /Orange*	*Rosa / Pink*	*Violeta / Purple*	*Rojo / Red*	*Beije / Tan*	*Blanco / White*	*Amarillo / Yellow*	*Claro / Light*	*Oscuro / Dark*

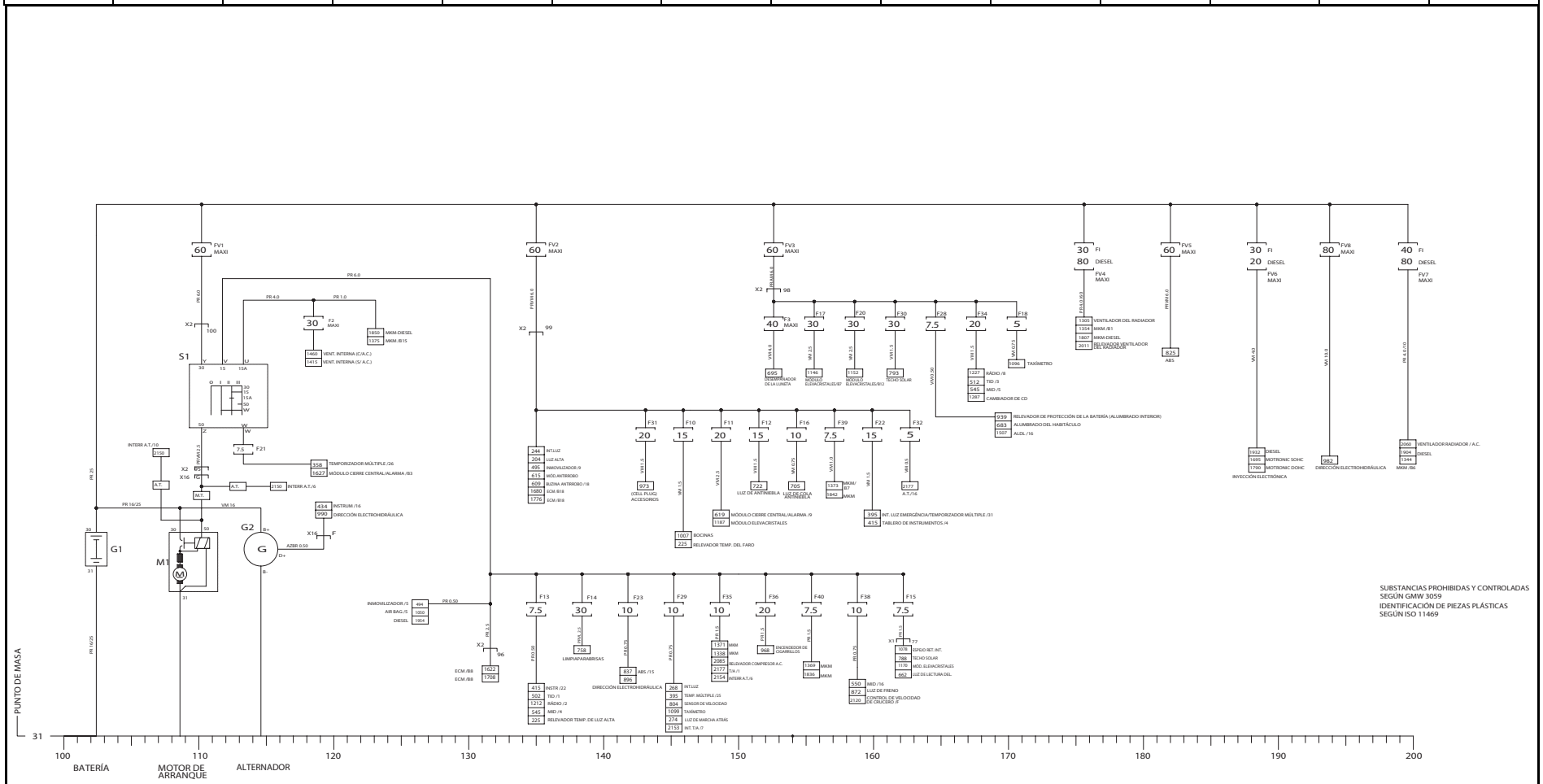

Cores - Fios / Colores - Alambres / Wires - Colors													
PR= Preto	**MR = Marrom**	**AZ = Azul**	**CZ = Cinza**	**VD= Verde**	***ORN= Laranja***	***PNK = Rosa***	***VL= Violeta***	***VM = Vermelho***	***TAN= Beje***	***BR = Branco***	***AM= Amarelo***	***LT = Claro***	***DK = Escuro***
Negro / Black	*Marrón / Brown*	*Azul / Blue*	*Gris / Gray*	*Verde / Green*	*Naranja /Orange*	*Rosa / Pink*	*Violeta / Purple*	*Rojo / Red*	*Beije / Tan*	*Blanco / White*	*Amarillo / Yellow*	*Claro / Light*	*Oscuro / Dark*

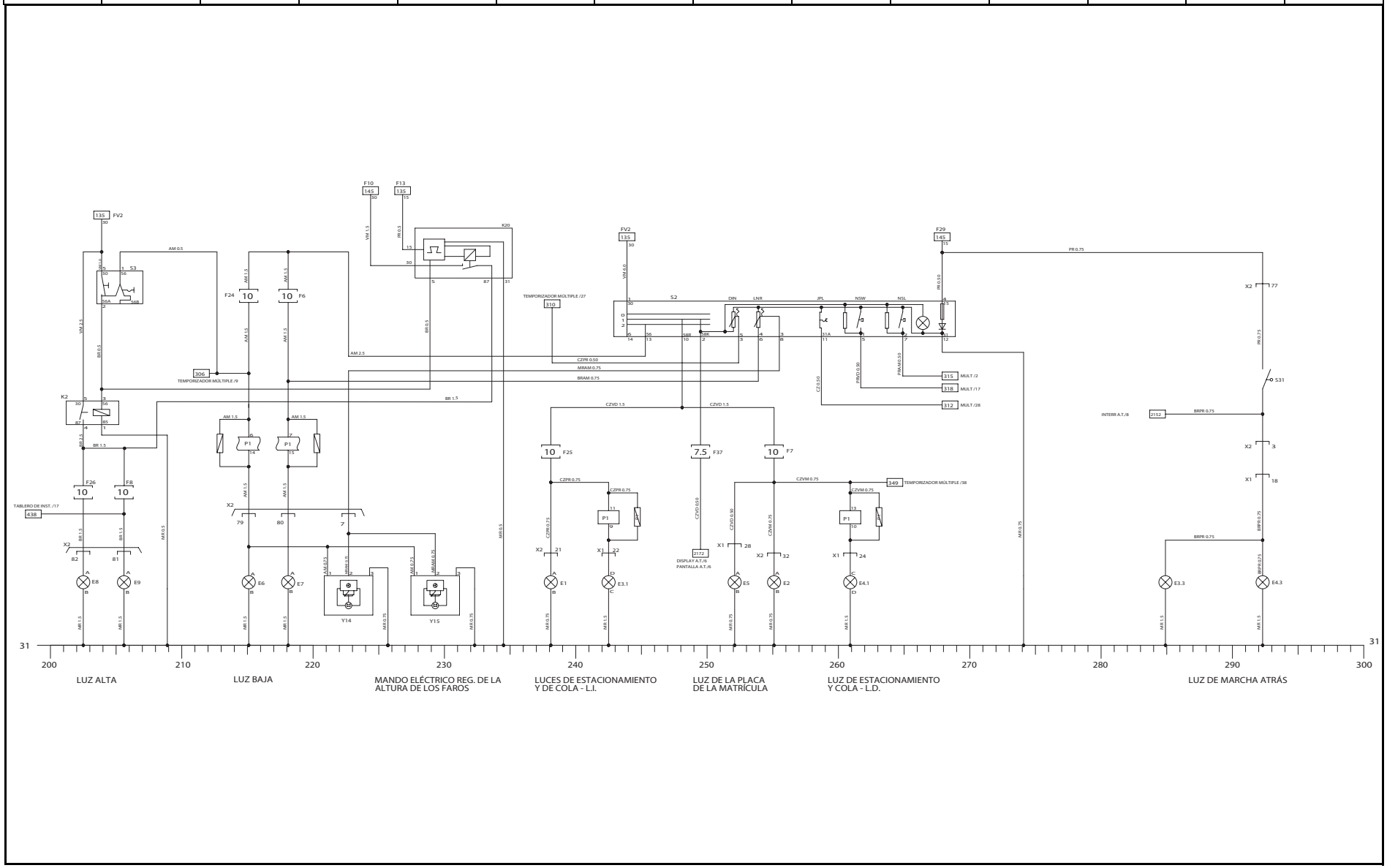

Cores - Fios / Colores - Alambres / Wires - Colors													
PR= Preto	**MR = Marrom**	**AZ = Azul**	**CZ = Cinza**	**VD= Verde**	***ORN= Laranja***	***PNK = Rosa***	***VL= Violeta***	***VM = Vermelho***	***TAN= Beje***	***BR = Branco***	***AM= Amarelo***	***LT = Claro***	***DK = Escuro***
Negro / Black	*Marrón / Brown*	*Azul / Blue*	*Gris / Gray*	*Verde / Green*	*Naranja /Orange*	*Rosa / Pink*	*Violeta / Purple*	*Rojo / Red*	*Beije / Tan*	*Blanco / White*	*Amarillo / Yellow*	*Claro / Light*	*Oscuro / Dark*

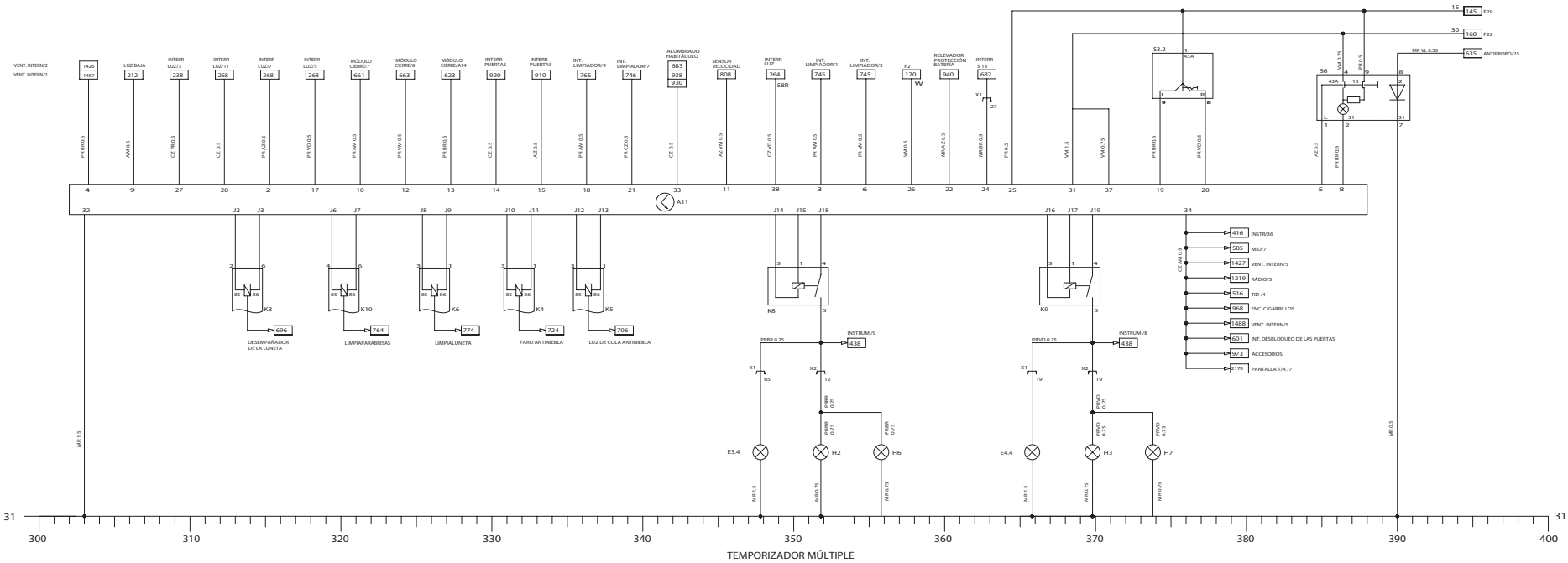

Cores - Fios / Colores - Alambres / Wires - Colors													
PR= Preto	**MR = Marrom**	**AZ = Azul**	**CZ = Cinza**	**VD= Verde**	***ORN= Laranja***	***PNK = Rosa***	***VL= Violeta***	***VM = Vermelho***	***TAN= Beje***	***BR = Branco***	***AM= Amarelo***	***LT = Claro***	***DK = Escuro***
Negro / Black	*Marrón / Brown*	*Azul / Blue*	*Gris / Gray*	*Verde / Green*	*Naranja /Orange*	*Rosa / Pink*	*Violeta / Purple*	*Rojo / Red*	*Beije / Tan*	*Blanco / White*	*Amarillo / Yellow*	*Claro / Light*	*Oscuro / Dark*

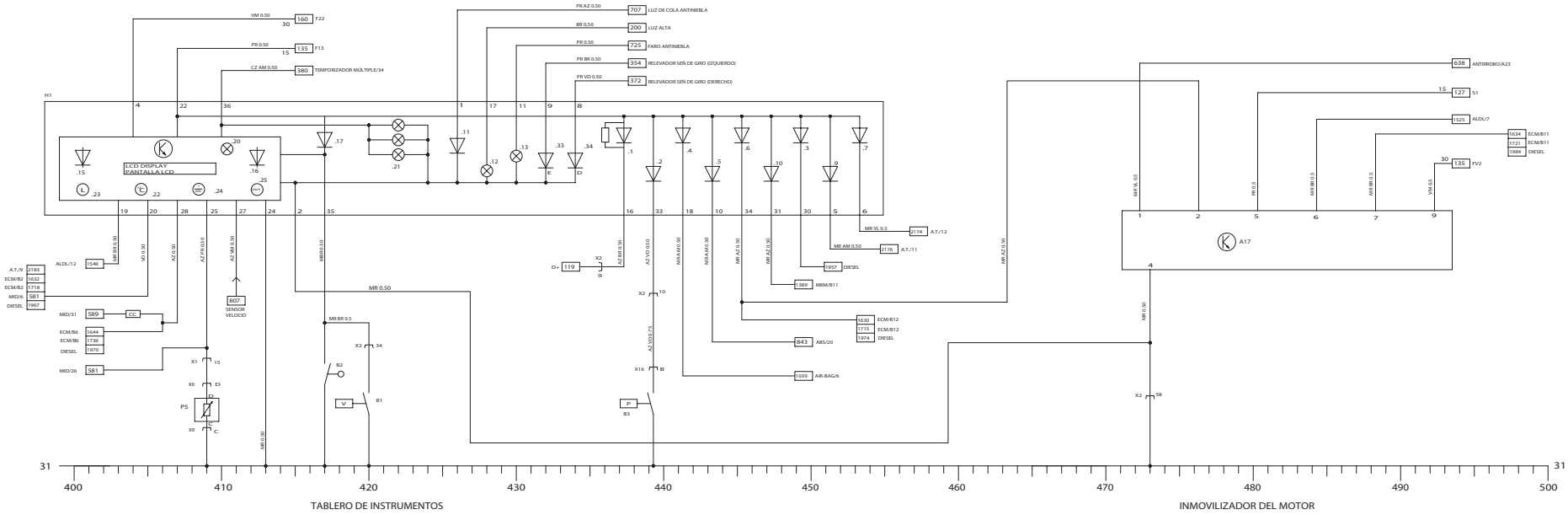

Cores - Fios / Colores - Alambres / Wires - Colors													
PR= Preto	**MR = Marrom**	**AZ = Azul**	**CZ = Cinza**	**VD= Verde**	***ORN= Laranja***	***PNK = Rosa***	***VL= Violeta***	***VM = Vermelho***	***TAN= Beje***	***BR = Branco***	***AM= Amarelo***	***LT = Claro***	***DK = Escuro***
Negro / Black	*Marrón / Brown*	*Azul / Blue*	*Gris / Gray*	*Verde / Green*	*Naranja /Orange*	*Rosa / Pink*	*Violeta / Purple*	*Rojo / Red*	*Beije / Tan*	*Blanco / White*	*Amarillo / Yellow*	*Claro / Light*	*Oscuro / Dark*

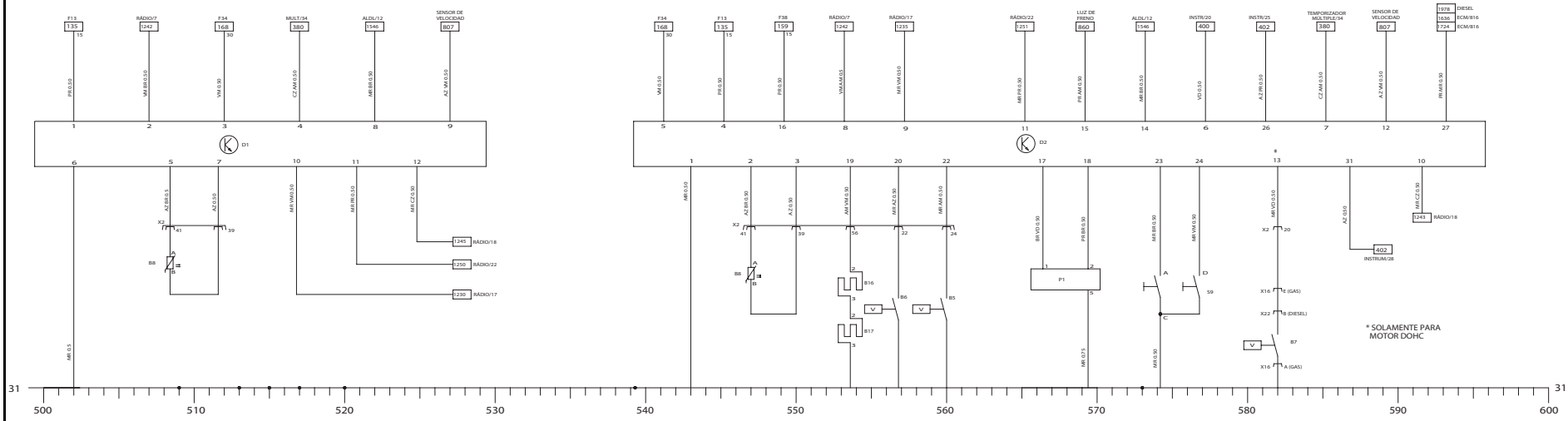

Cores - Fios / Colores - Alambres / Wires - Colors												
PR= Preto *Negro / Black*	**MR = Marrom** *Marrón / Brown*	**AZ = Azul** *Azul / Blue*	**CZ = Cinza** *Gris / Gray*	**VD= Verde** *Verde / Green*	***ORN= Laranja*** *Naranja /Orange*	***PNK = Rosa*** *Rosa / Pink*	***VL= Violeta*** *Violeta / Purple*	***VM = Vermelho*** *Rojo / Red*	***TAN= Beje*** *Beije / Tan*	***BR = Branco*** *Blanco / White*	***AM= Amarelo*** *Amarillo / Yellow*	***LT = Claro*** *Claro / Light*	***DK = Escuro*** *Oscuro / Dark*

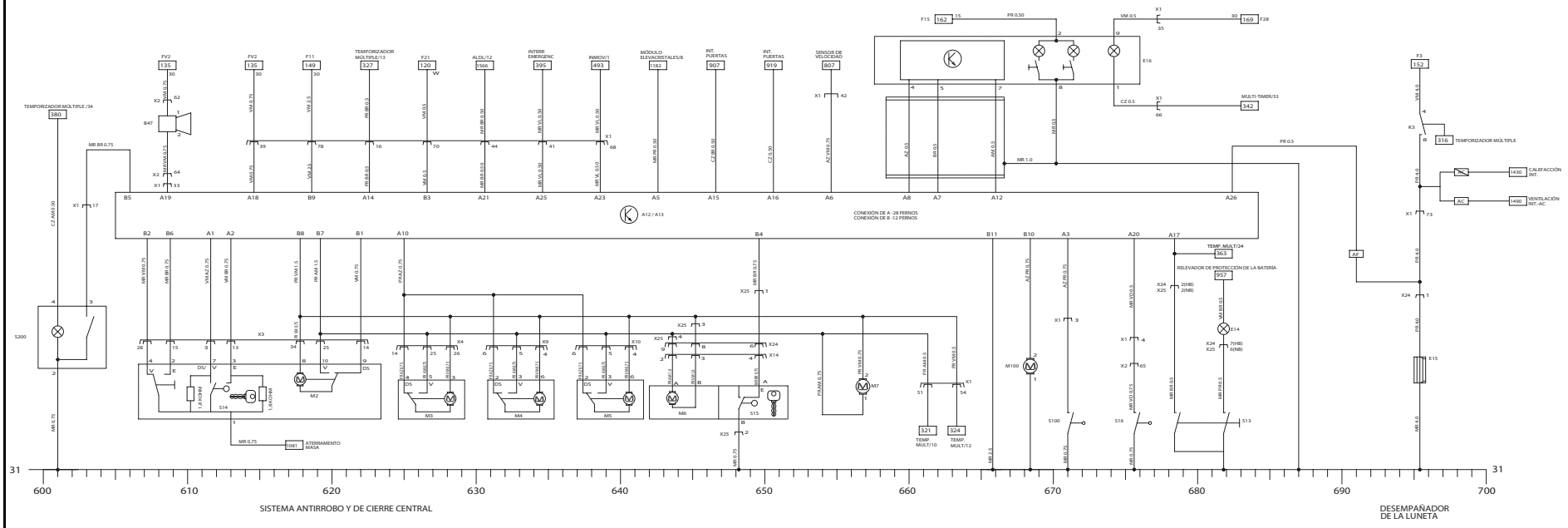

Cores - Fios / Colores - Alambres / Wires - Colors													
PR= Preto	**MR = Marrom**	**AZ = Azul**	**CZ = Cinza**	**VD= Verde**	***ORN= Laranja***	***PNK = Rosa***	***VL= Violeta***	***VM = Vermelho***	***TAN= Beje***	***BR = Branco***	***AM= Amarelo***	***LT = Claro***	***DK = Escuro***
Negro / Black	*Marrón / Brown*	*Azul / Blue*	*Gris / Gray*	*Verde / Green*	*Naranja /Orange*	*Rosa / Pink*	*Violeta / Purple*	*Rojo / Red*	*Beije / Tan*	*Blanco / White*	*Amarillo / Yellow*	*Claro / Light*	*Oscuro / Dark*

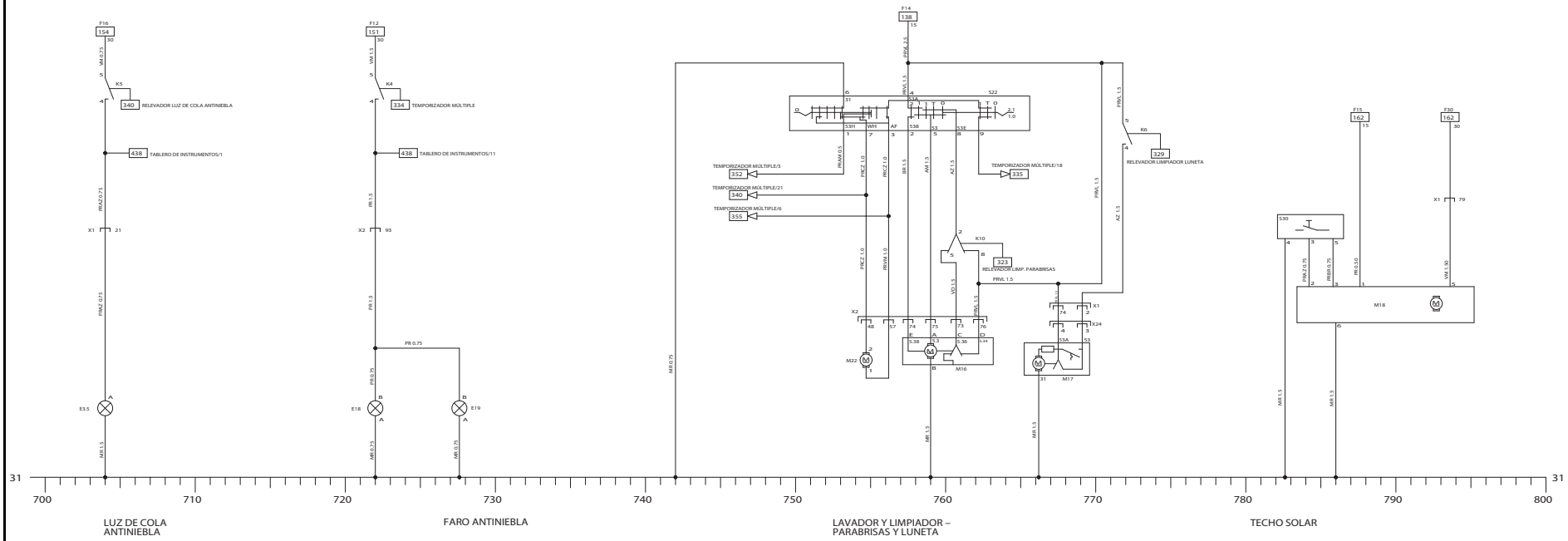

Cores - Fios / Colores - Alambres / Wires - Colors													
PR= Preto	***MR = Marrom***	***AZ = Azul***	***CZ = Cinza***	***VD= Verde***	***ORN= Laranja***	***PNK = Rosa***	***VL= Violeta***	***VM = Vermelho***	***TAN= Beje***	***BR = Branco***	***AM= Amarelo***	***LT = Claro***	***DK = Escuro***
Negro / Black	*Marrón / Brown*	*Azul / Blue*	*Gris / Gray*	*Verde / Green*	*Naranja /Orange*	*Rosa / Pink*	*Violeta / Purple*	*Rojo / Red*	*Beije / Tan*	*Blanco / White*	*Amarillo / Yellow*	*Claro / Light*	*Oscuro / Dark*

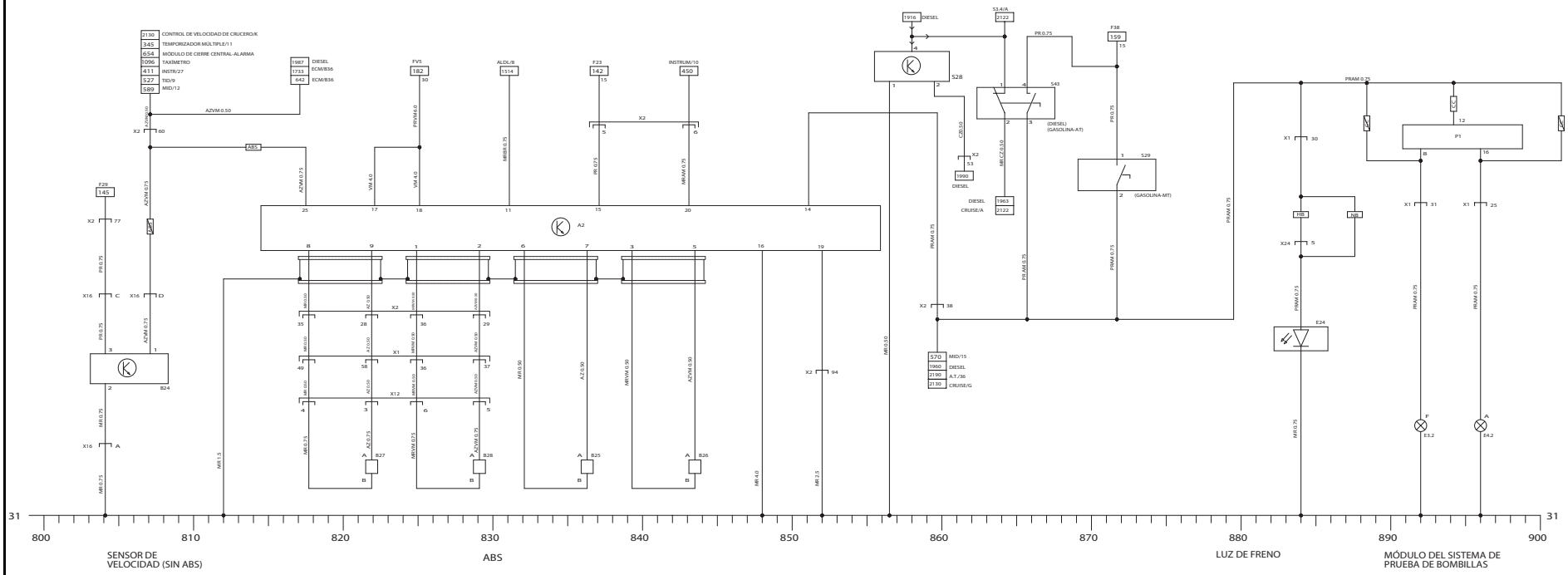

Cores - Fios / Colores - Alambres / Wires - Colors													
PR= Preto *Negro / Black*	**MR = Marrom** *Marrón / Brown*	**AZ = Azul** *Azul / Blue*	**CZ = Cinza** *Gris / Gray*	**VD= Verde** *Verde / Green*	***ORN= Laranja*** *Naranja /Orange*	***PNK = Rosa*** *Rosa / Pink*	***VL= Violeta*** *Violeta / Purple*	***VM = Vermelho*** *Rojo / Red*	***TAN= Beje*** *Beije / Tan*	***BR = Branco*** *Blanco / White*	***AM= Amarelo*** *Amarillo / Yellow*	***LT = Claro*** *Claro / Light*	***DK = Escuro*** *Oscuro / Dark*

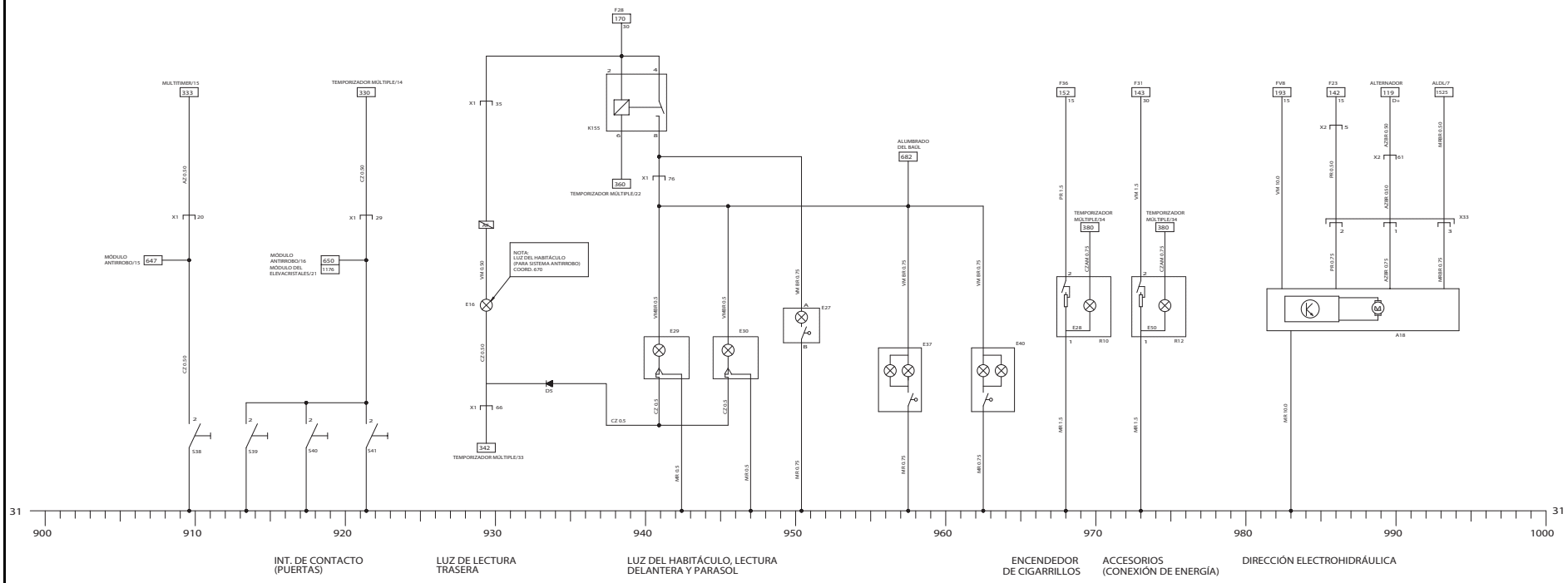

Cores - Fios / Colores - Alambres / Wires - Colors													
PR= Preto	**MR = Marrom**	**AZ = Azul**	**CZ = Cinza**	**VD= Verde**	***ORN= Laranja***	***PNK = Rosa***	***VL= Violeta***	***VM = Vermelho***	***TAN= Beje***	***BR = Branco***	***AM= Amarelo***	***LT = Claro***	***DK = Escuro***
Negro / Black	*Marrón / Brown*	*Azul / Blue*	*Gris / Gray*	*Verde / Green*	*Naranja /Orange*	*Rosa / Pink*	*Violeta / Purple*	*Rojo / Red*	*Beije / Tan*	*Blanco / White*	*Amarillo / Yellow*	*Claro / Light*	*Oscuro / Dark*

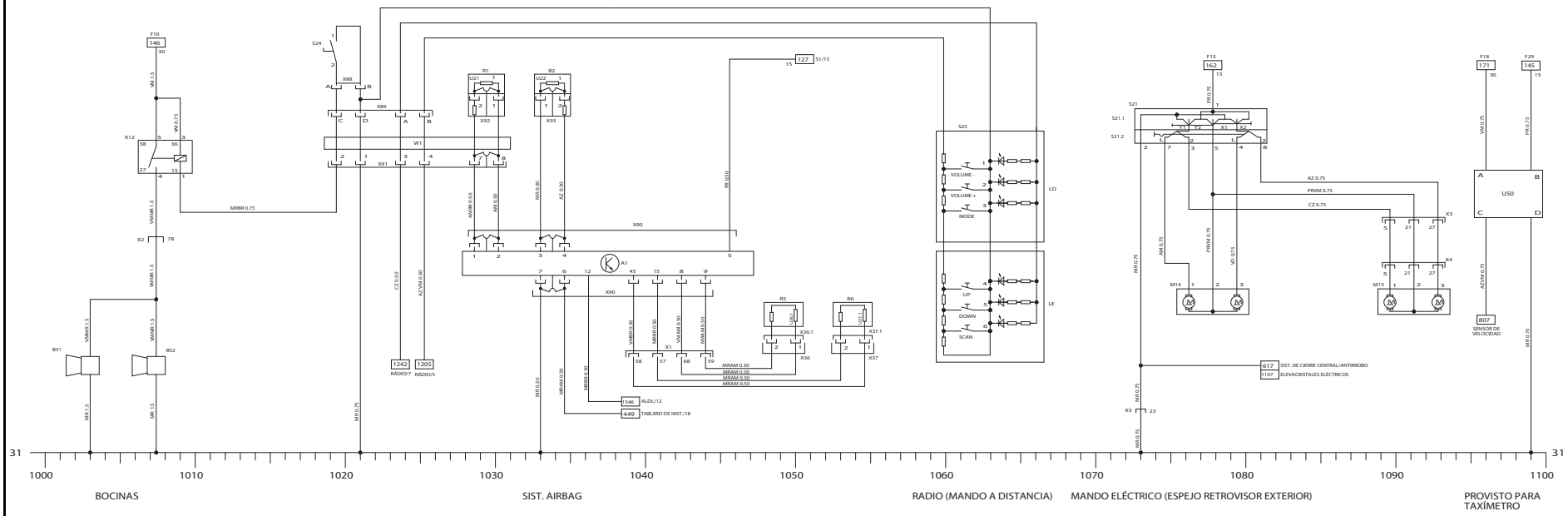

Cores - Fios / Colores - Alambres / Wires - Colors													
PR= Preto	**MR = Marrom**	**AZ = Azul**	**CZ = Cinza**	**VD= Verde**	***ORN= Laranja***	***PNK = Rosa***	***VL= Violeta***	***VM = Vermelho***	***TAN= Beje***	***BR = Branco***	***AM= Amarelo***	***LT = Claro***	***DK = Escuro***
Negro / Black	*Marrón / Brown*	*Azul / Blue*	*Gris / Gray*	*Verde / Green*	*Naranja /Orange*	*Rosa / Pink*	*Violeta / Purple*	*Rojo / Red*	*Beije / Tan*	*Blanco / White*	*Amarillo / Yellow*	*Claro / Light*	*Oscuro / Dark*

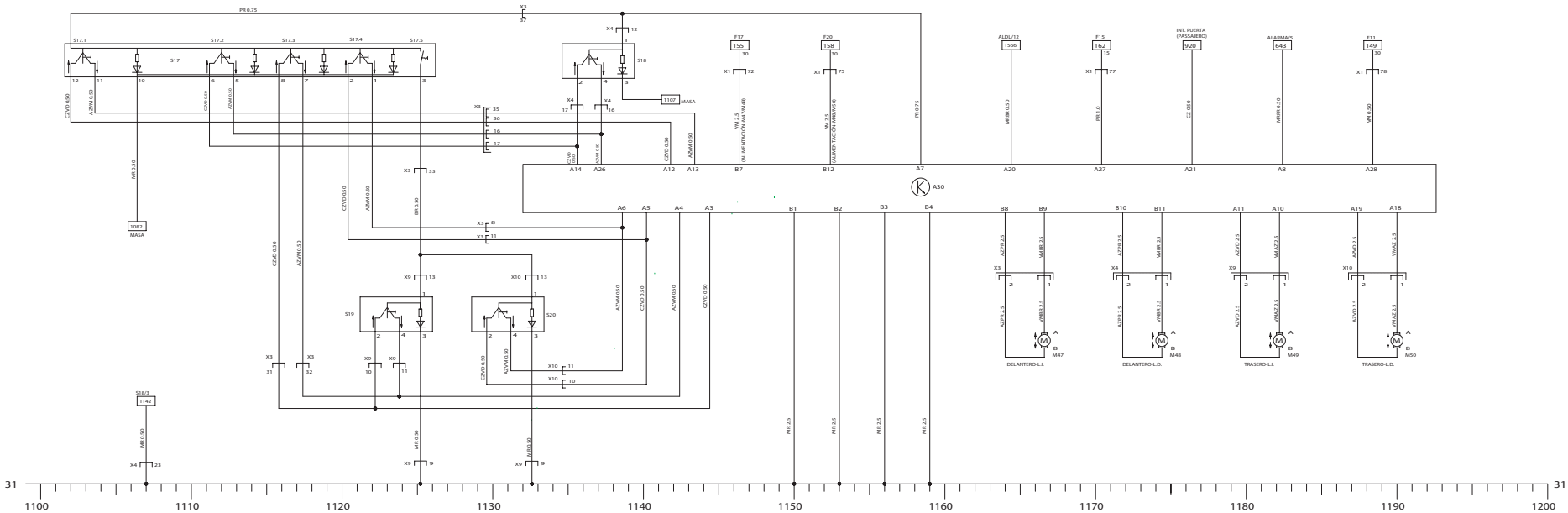

SISTEMA-ELEVACRISTALES ELÉCTRICOS (2 Y 4 PUERTAS)

Cores - Fios / Colores - Alambres / Wires - Colors													
PR= Preto	***MR = Marrom***	***AZ = Azul***	***CZ = Cinza***	***VD= Verde***	***ORN= Laranja***	***PNK = Rosa***	***VL= Violeta***	***VM = Vermelho***	***TAN= Beje***	***BR = Branco***	***AM= Amarelo***	***LT = Claro***	***DK = Escuro***
Negro / Black	*Marrón / Brown*	*Azul / Blue*	*Gris / Gray*	*Verde / Green*	*Naranja /Orange*	*Rosa / Pink*	*Violeta / Purple*	*Rojo / Red*	*Beije / Tan*	*Blanco / White*	*Amarillo / Yellow*	*Claro / Light*	*Oscuro / Dark*

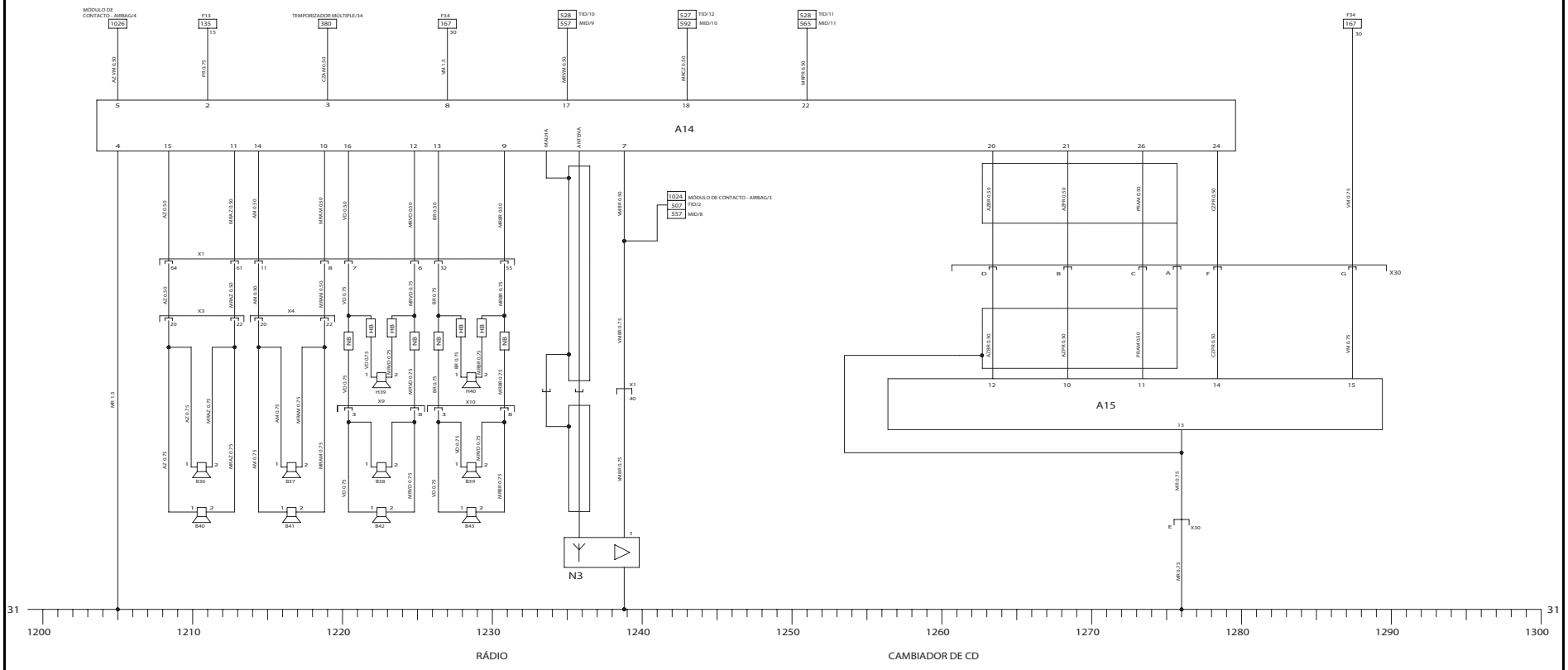

Cores - Fios / Colores - Alambres / Wires - Colors													
PR= Preto *Negro / Black*	**MR = Marrom** *Marrón / Brown*	**AZ = Azul** *Azul / Blue*	**CZ = Cinza** *Gris / Gray*	**VD= Verde** *Verde / Green*	***ORN= Laranja*** *Naranja /Orange*	***PNK = Rosa*** *Rosa / Pink*	***VL= Violeta*** *Violeta / Purple*	***VM = Vermelho*** *Rojo / Red*	***TAN= Beje*** *Beije / Tan*	***BR = Branco*** *Blanco / White*	***AM= Amarelo*** *Amarillo / Yellow*	***LT = Claro*** *Claro / Light*	***DK = Escuro*** *Oscuro / Dark*

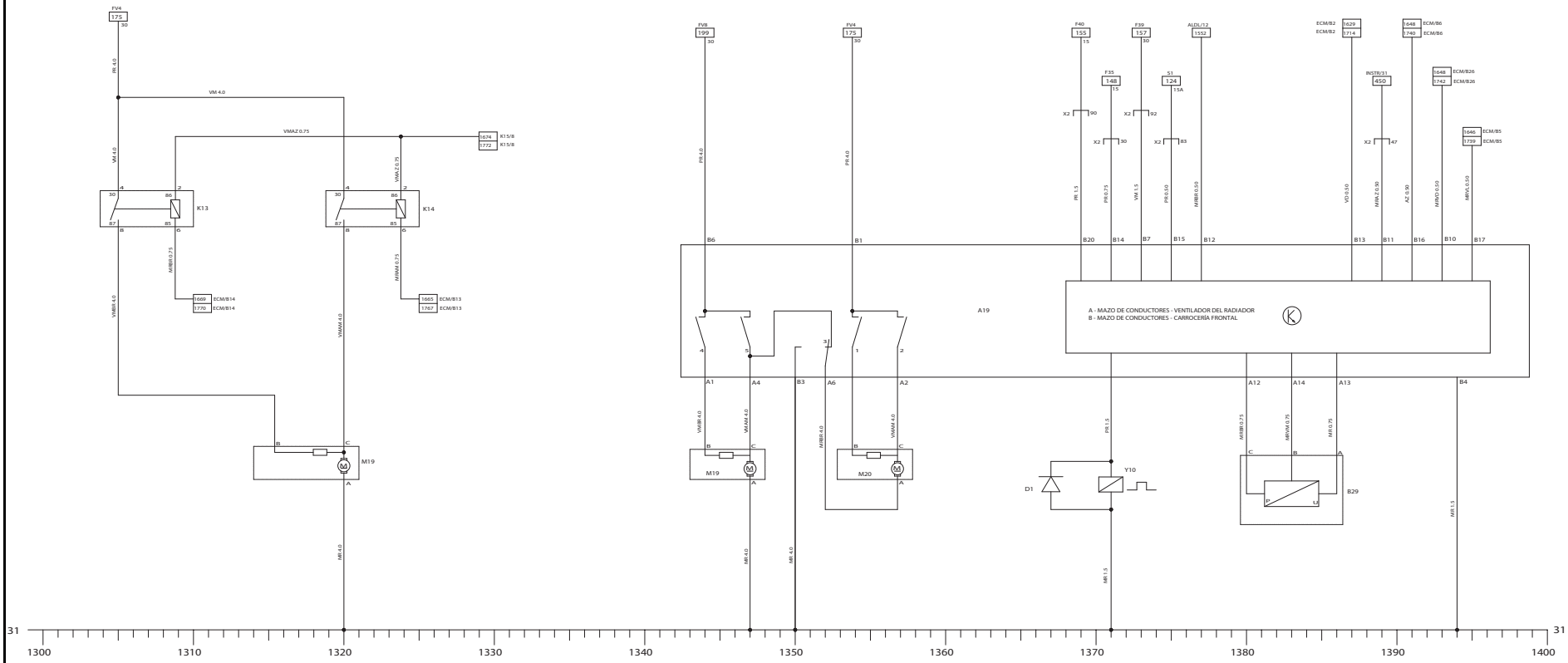

VENTILADOR - RADIADOR - (GASOLINA)
(SIN ACONDICIONADOR DE AIRE)

VENTILADOR RADIADOR (CON ACONDICIONADOR DE AIRE)-(GASOLINA) (MKM)

HASTA EL AÑO MODELO 2000

Cores - Fios / Colores - Alambres / Wires - Colors													
PR= Preto	**MR = Marrom**	**AZ = Azul**	**CZ = Cinza**	**VD= Verde**	***ORN= Laranja***	***PNK = Rosa***	***VL= Violeta***	***VM = Vermelho***	***TAN= Beje***	***BR = Branco***	***AM= Amarelo***	***LT = Claro***	***DK = Escuro***
Negro / Black	*Marrón / Brown*	*Azul / Blue*	*Gris / Gray*	*Verde / Green*	*Naranja /Orange*	*Rosa / Pink*	*Violeta / Purple*	*Rojo / Red*	*Beije / Tan*	*Blanco / White*	*Amarillo / Yellow*	*Claro / Light*	*Oscuro / Dark*

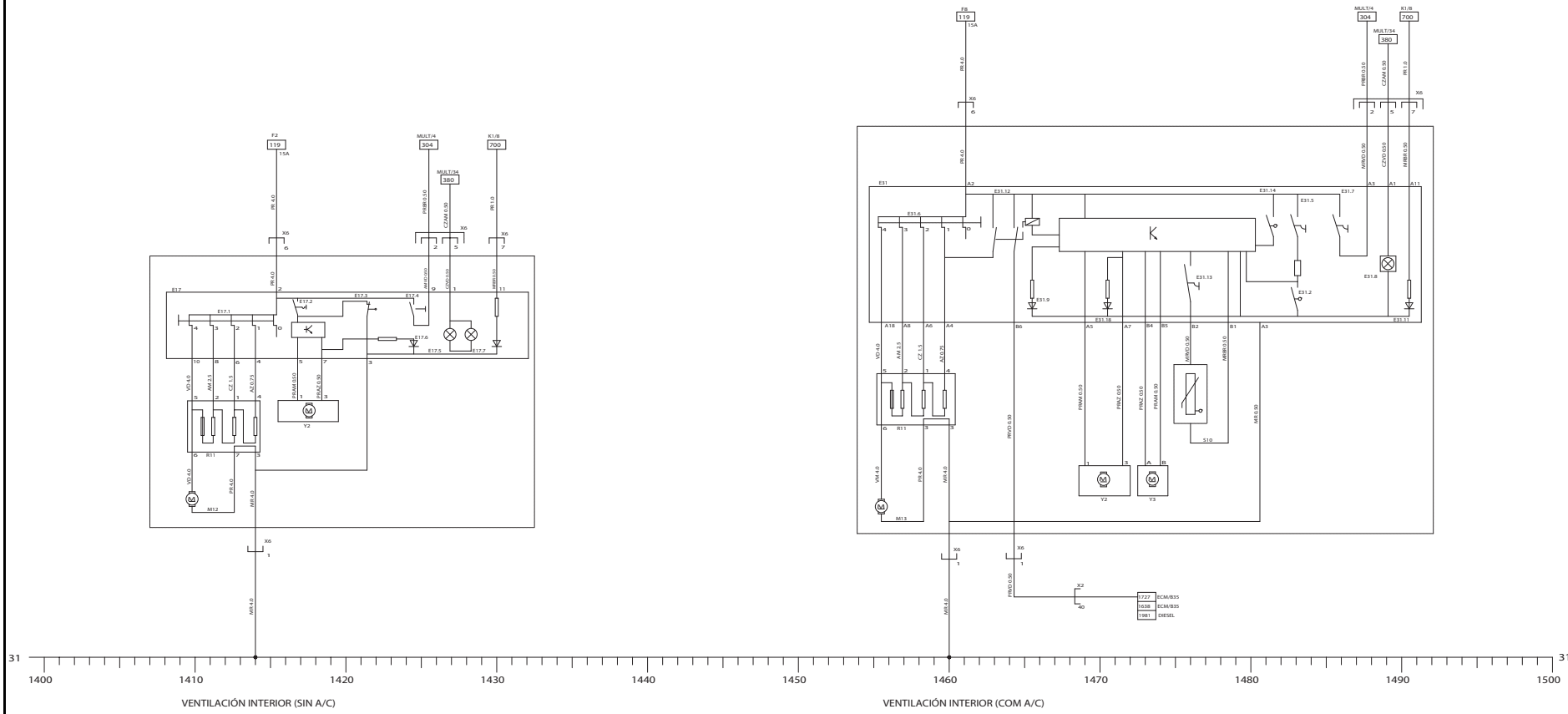

Cores - Fios / Colores - Alambres / Wires - Colors													
PR= Preto *Negro / Black*	**MR = Marrom** *Marrón / Brown*	**AZ = Azul** *Azul / Blue*	**CZ = Cinza** *Gris / Gray*	**VD= Verde** *Verde / Green*	***ORN= Laranja*** *Naranja /Orange*	***PNK = Rosa*** *Rosa / Pink*	***VL= Violeta*** *Violeta / Purple*	***VM = Vermelho*** *Rojo / Red*	***TAN= Beje*** *Beije / Tan*	***BR = Branco*** *Blanco / White*	***AM= Amarelo*** *Amarillo / Yellow*	***LT = Claro*** *Claro / Light*	***DK = Escuro*** *Oscuro / Dark*

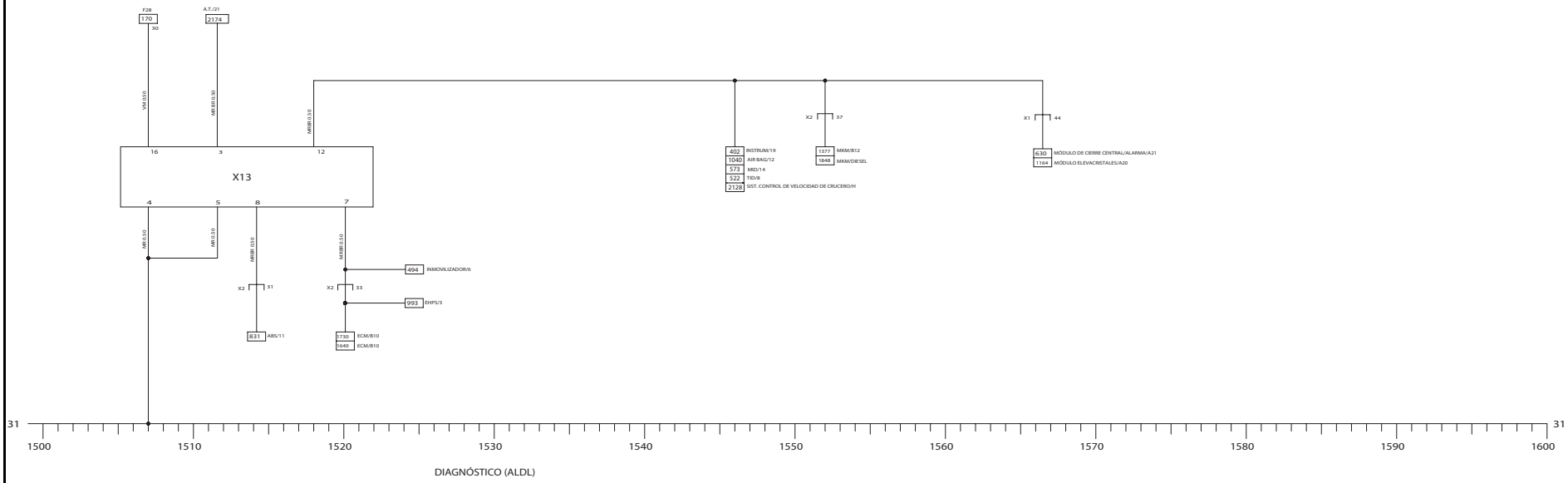

Cores - Fios / Colores - Alambres / Wires - Colors													
PR= Preto	**MR = Marrom**	**AZ = Azul**	**CZ = Cinza**	**VD= Verde**	***ORN= Laranja***	***PNK = Rosa***	***VL= Violeta***	***VM = Vermelho***	***TAN= Beje***	***BR = Branco***	***AM= Amarelo***	***LT = Claro***	***DK = Escuro***
Negro / Black	*Marrón / Brown*	*Azul / Blue*	*Gris / Gray*	*Verde / Green*	*Naranja /Orange*	*Rosa / Pink*	*Violeta / Purple*	*Rojo / Red*	*Beije / Tan*	*Blanco / White*	*Amarillo / Yellow*	*Claro / Light*	*Oscuro / Dark*

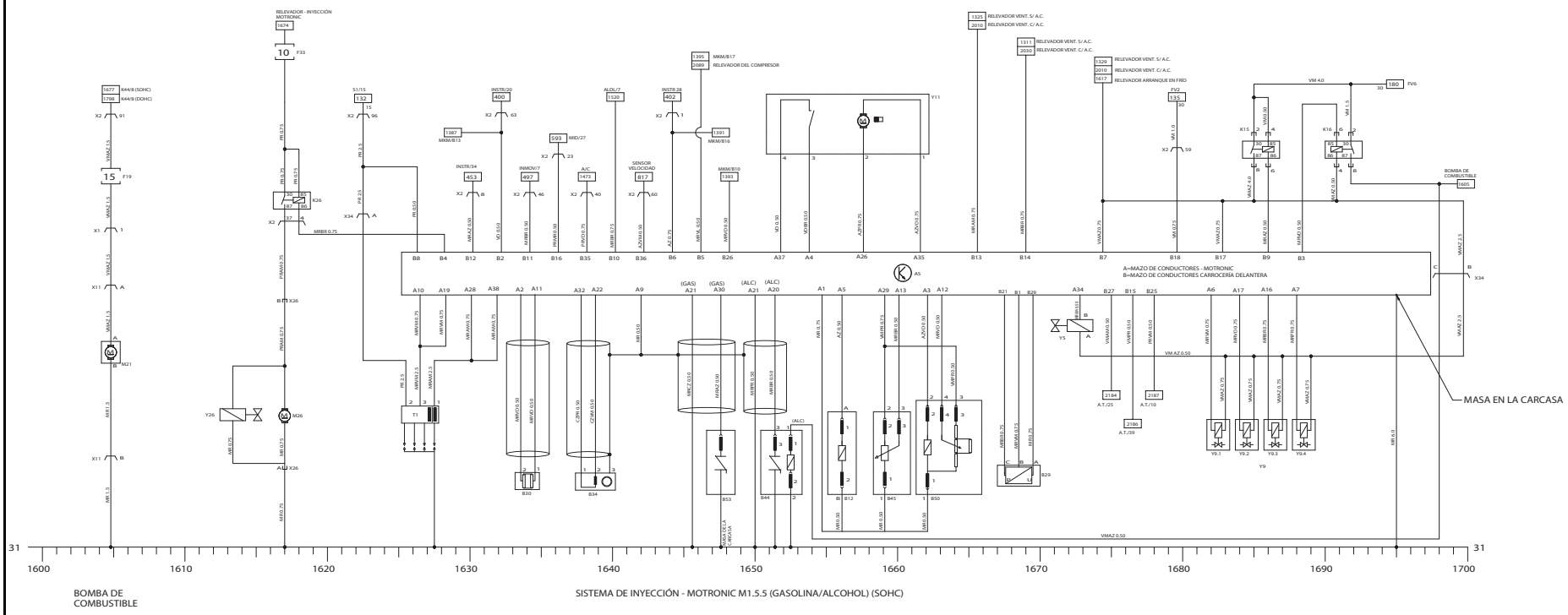

Cores - Fios / Colores - Alambres / Wires - Colors													
PR= Preto	**MR = Marrom**	**AZ = Azul**	**CZ = Cinza**	**VD= Verde**	***ORN= Laranja***	***PNK = Rosa***	***VL= Violeta***	***VM = Vermelho***	***TAN= Beje***	***BR = Branco***	***AM= Amarelo***	***LT = Claro***	***DK = Escuro***
Negro / Black	*Marrón / Brown*	*Azul / Blue*	*Gris / Gray*	*Verde / Green*	*Naranja /Orange*	*Rosa / Pink*	*Violeta / Purple*	*Rojo / Red*	*Beije / Tan*	*Blanco / White*	*Amarillo / Yellow*	*Claro / Light*	*Oscuro / Dark*

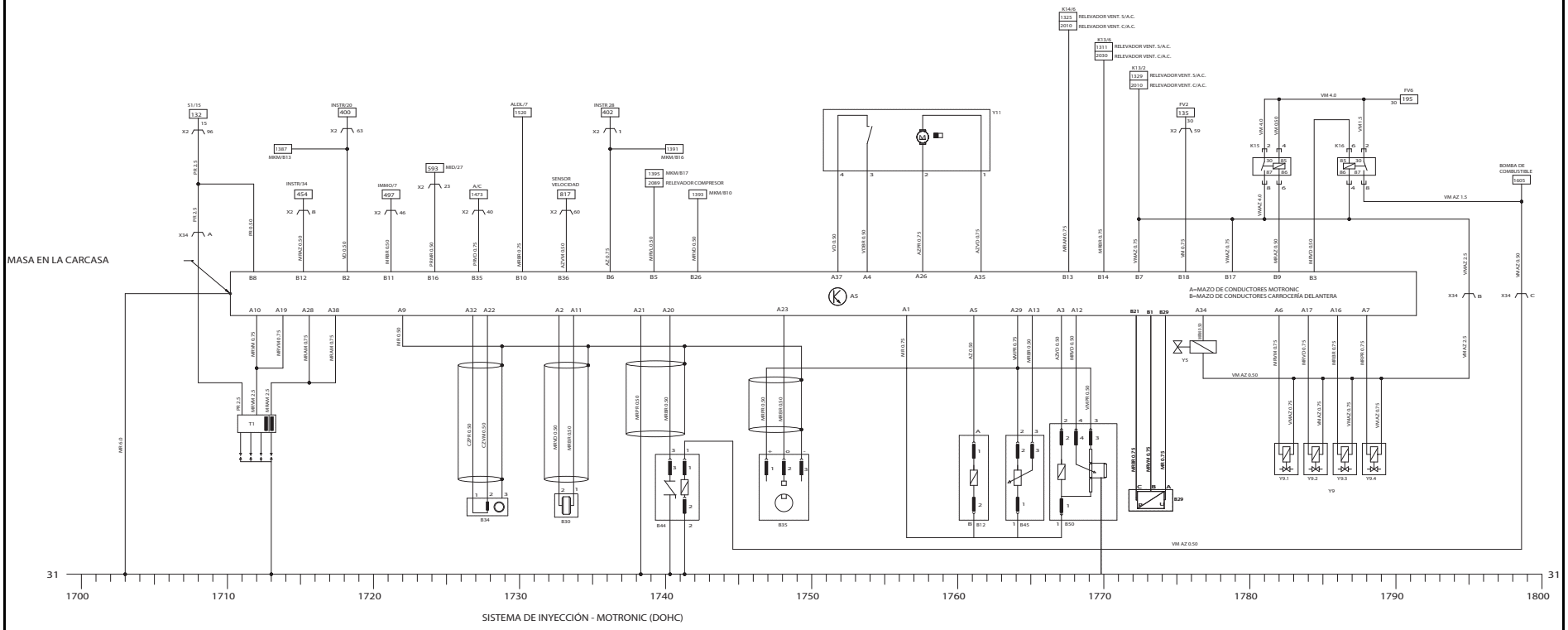

SISTEMA DE INYECCIÓN - MOTRONIC (DOHC)

Cores - Fios / Colores - Alambres / Wires - Colors													
PR= Preto	**MR = Marrom**	**AZ = Azul**	**CZ = Cinza**	**VD= Verde**	***ORN= Laranja***	***PNK = Rosa***	***VL= Violeta***	***VM = Vermelho***	***TAN= Beje***	***BR = Branco***	***AM= Amarelo***	***LT = Claro***	***DK = Escuro***
Negro / Black	*Marrón / Brown*	*Azul / Blue*	*Gris / Gray*	*Verde / Green*	*Naranja /Orange*	*Rosa / Pink*	*Violeta / Purple*	*Rojo / Red*	*Beije / Tan*	*Blanco / White*	*Amarillo / Yellow*	*Claro / Light*	*Oscuro / Dark*

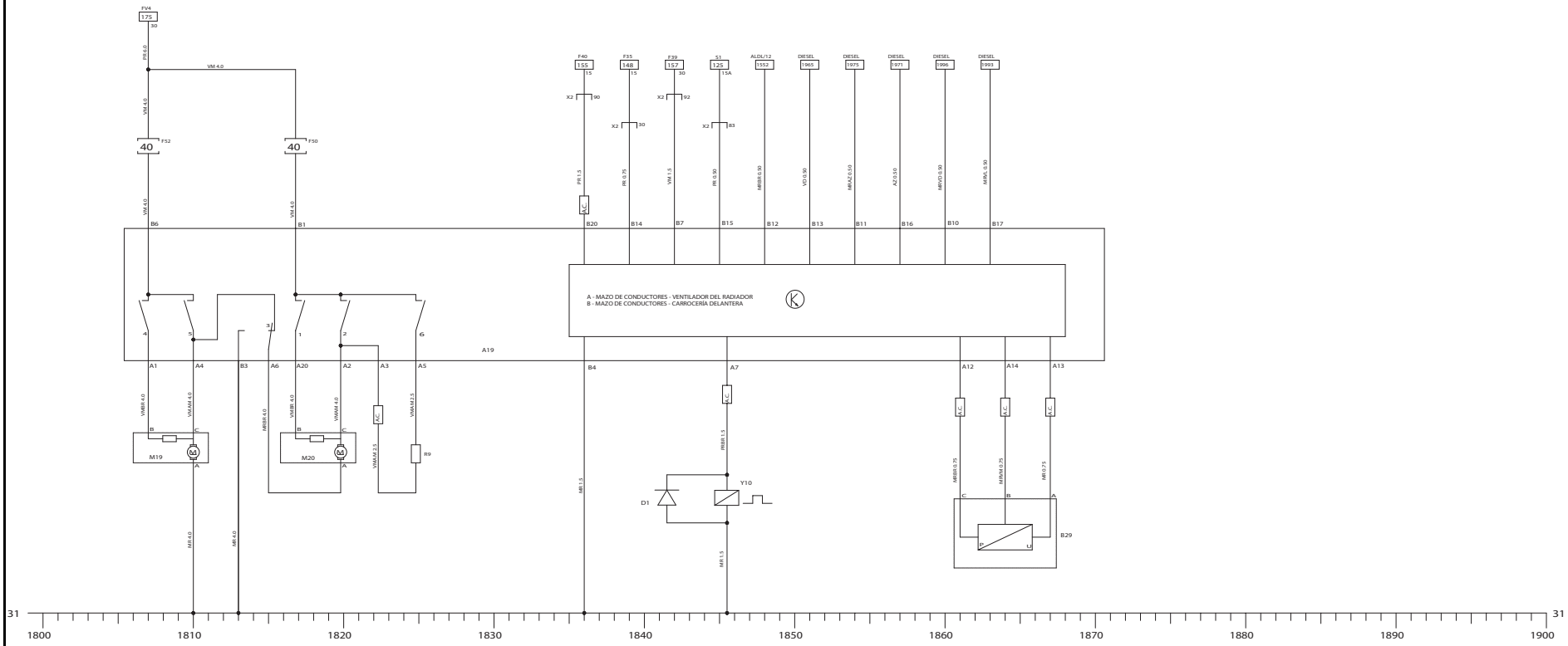

VENTILADOR - RADIADOR (MKM) - DIESEL

Cores - Fios / Colores - Alambres / Wires - Colors													
PR= Preto	**MR = Marrom**	**AZ = Azul**	**CZ = Cinza**	**VD= Verde**	***ORN= Laranja***	***PNK = Rosa***	***VL= Violeta***	***VM = Vermelho***	***TAN= Beje***	***BR = Branco***	***AM= Amarelo***	***LT = Claro***	***DK = Escuro***
Negro / Black	*Marrón / Brown*	*Azul / Blue*	*Gris / Gray*	*Verde / Green*	*Naranja /Orange*	*Rosa / Pink*	*Violeta / Purple*	*Rojo / Red*	*Beije / Tan*	*Blanco / White*	*Amarillo / Yellow*	*Claro / Light*	*Oscuro / Dark*

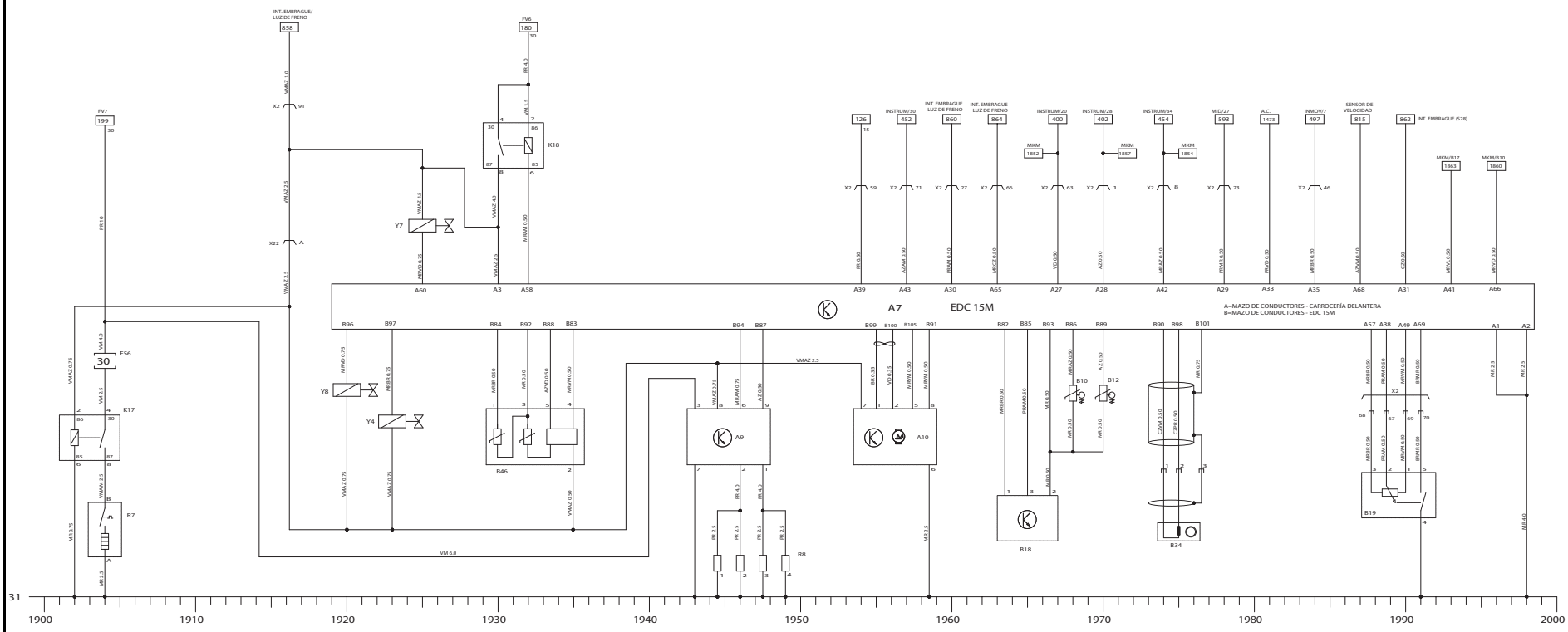

SISTEMA - MOTOR DIESEL (X20DTL)

Cores - Fios / Colores - Alambres / Wires - Colors													
PR= Preto	**MR = Marrom**	**AZ = Azul**	**CZ = Cinza**	**VD= Verde**	***ORN= Laranja***	***PNK = Rosa***	***VL= Violeta***	***VM = Vermelho***	***TAN= Beje***	***BR = Branco***	***AM= Amarelo***	***LT = Claro***	***DK = Escuro***
Negro / Black	*Marrón / Brown*	*Azul / Blue*	*Gris / Gray*	*Verde / Green*	*Naranja /Orange*	*Rosa / Pink*	*Violeta / Purple*	*Rojo / Red*	*Beije / Tan*	*Blanco / White*	*Amarillo / Yellow*	*Claro / Light*	*Oscuro / Dark*

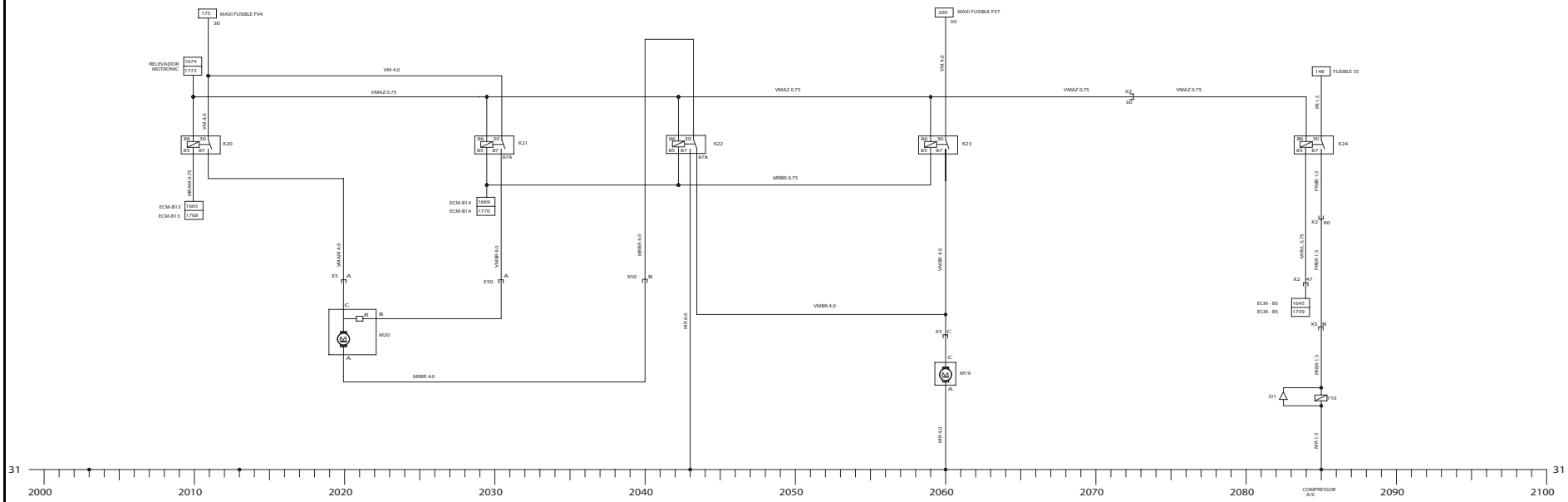

VENTILADOR DEL RADIADOR - GASOLINA/ALCOHOL (CON ACONDICIONADOR DE AIRE)

Cores - Fios / Colores - Alambres / Wires - Colors													
PR= Preto	**MR = Marrom**	**AZ = Azul**	**CZ = Cinza**	**VD= Verde**	***ORN= Laranja***	***PNK = Rosa***	***VL= Violeta***	***VM = Vermelho***	***TAN= Beje***	***BR = Branco***	***AM= Amarelo***	***LT = Claro***	***DK = Escuro***
Negro / Black	*Marrón / Brown*	*Azul / Blue*	*Gris / Gray*	*Verde / Green*	*Naranja /Orange*	*Rosa / Pink*	*Violeta / Purple*	*Rojo / Red*	*Beije / Tan*	*Blanco / White*	*Amarillo / Yellow*	*Claro / Light*	*Oscuro / Dark*

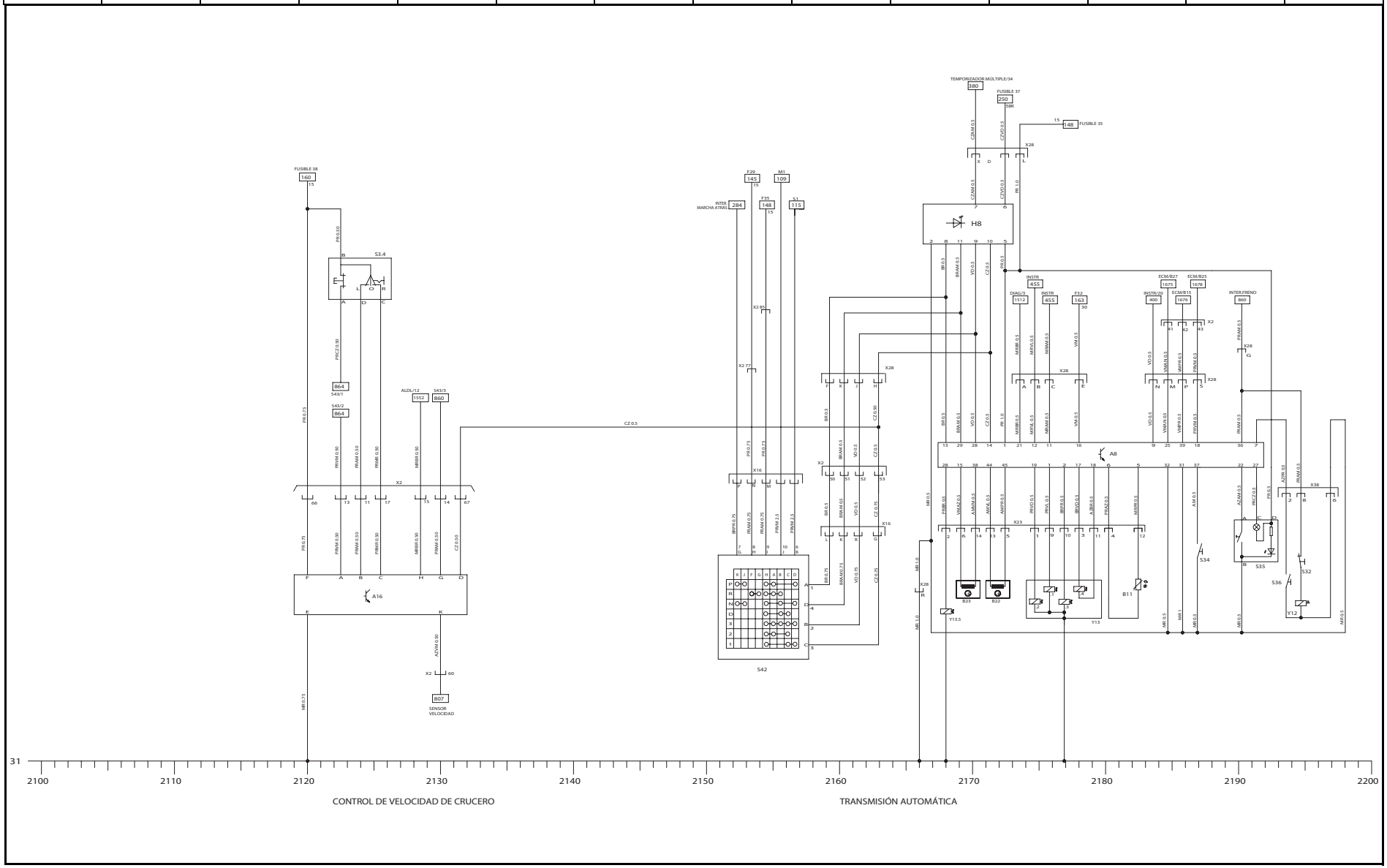

Cores - Fios / Colores - Alambres / Wires - Colors													
PR= Preto	**MR = Marrom**	**AZ = Azul**	**CZ = Cinza**	**VD= Verde**	***ORN= Laranja***	***PNK = Rosa***	***VL= Violeta***	***VM = Vermelho***	***TAN= Beje***	***BR = Branco***	***AM= Amarelo***	***LT = Claro***	***DK = Escuro***
Negro / Black	*Marrón / Brown*	*Azul / Blue*	*Gris / Gray*	*Verde / Green*	*Naranja /Orange*	*Rosa / Pink*	*Violeta / Purple*	*Rojo / Red*	*Beije / Tan*	*Blanco / White*	*Amarillo / Yellow*	*Claro / Light*	*Oscuro / Dark*

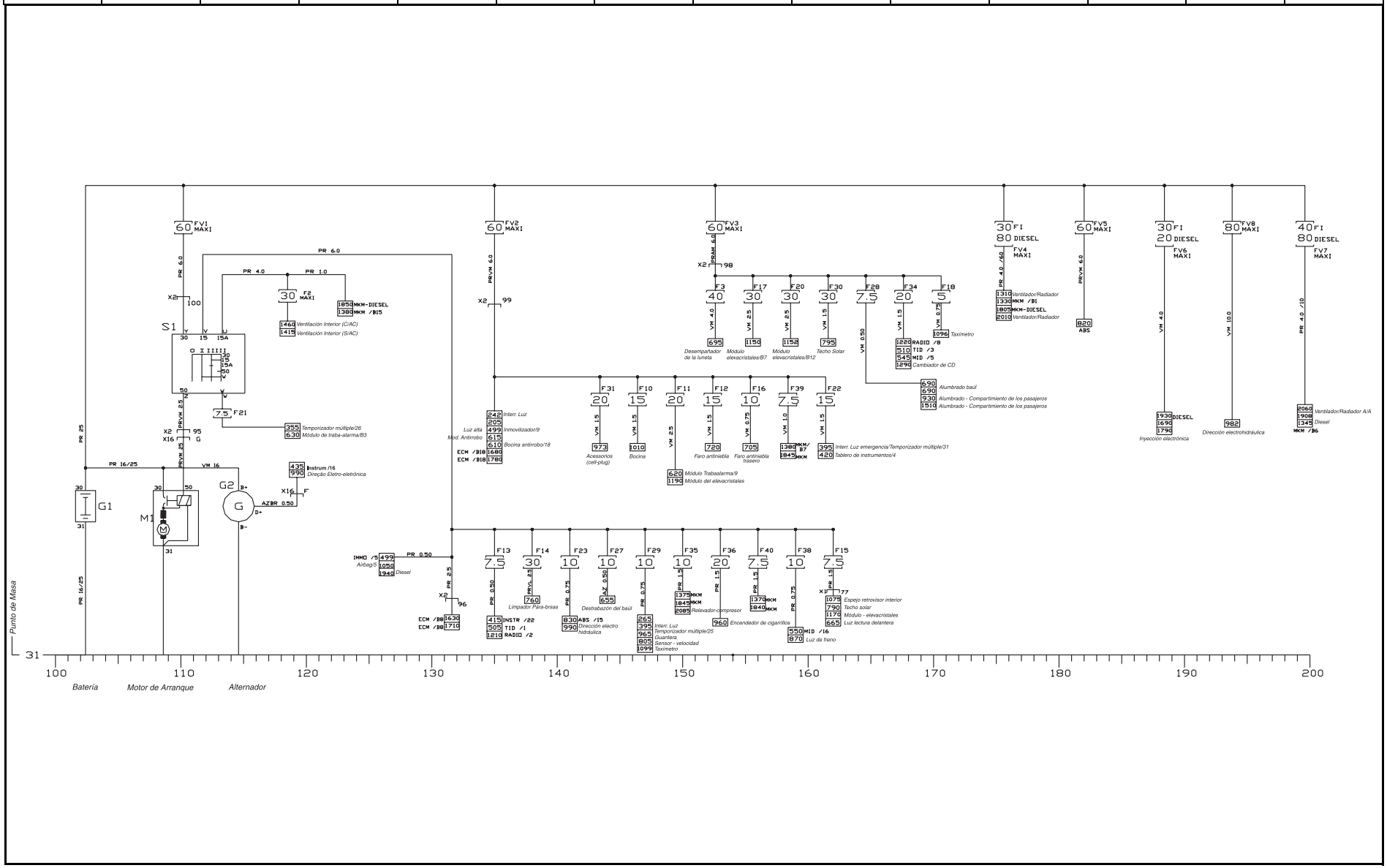

Cores - Fios / Colores - Alambres / Wires - Colors													
PR= Preto *Negro / Black*	**MR = Marrom** *Marrón / Brown*	**AZ = Azul** *Azul / Blue*	**CZ = Cinza** *Gris / Gray*	**VD= Verde** *Verde / Green*	***ORN= Laranja*** *Naranja /Orange*	***PNK = Rosa*** *Rosa / Pink*	***VL= Violeta*** *Violeta / Purple*	***VM = Vermelho*** *Rojo / Red*	***TAN= Beje*** *Beije / Tan*	***BR = Branco*** *Blanco / White*	***AM= Amarelo*** *Amarillo / Yellow*	***LT = Claro*** *Claro / Light*	***DK = Escuro*** *Oscuro / Dark*

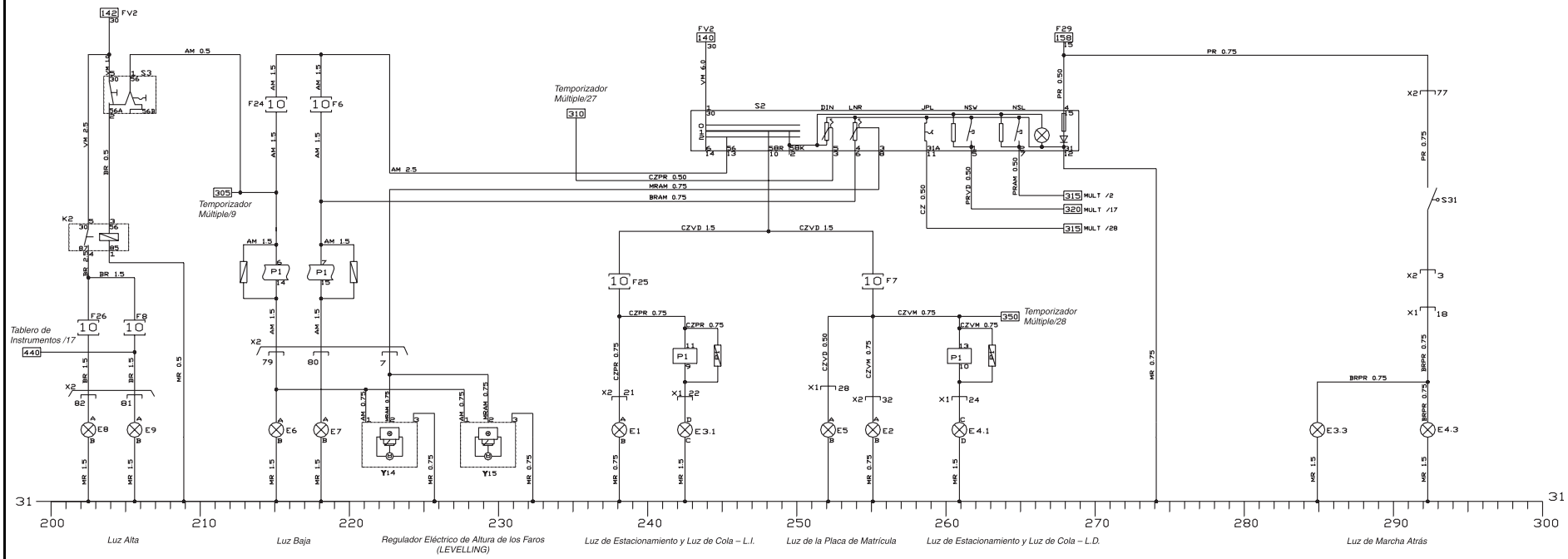

Cores - Fios / Colores - Alambres / Wires - Colors													
PR= Preto	**MR = Marrom**	**AZ = Azul**	**CZ = Cinza**	**VD= Verde**	***ORN= Laranja***	***PNK = Rosa***	***VL= Violeta***	***VM = Vermelho***	***TAN= Beje***	***BR = Branco***	***AM= Amarelo***	***LT = Claro***	***DK = Escuro***
Negro / Black	*Marrón / Brown*	*Azul / Blue*	*Gris / Gray*	*Verde / Green*	*Naranja /Orange*	*Rosa / Pink*	*Violeta / Purple*	*Rojo / Red*	*Beije / Tan*	*Blanco / White*	*Amarillo / Yellow*	*Claro / Light*	*Oscuro / Dark*

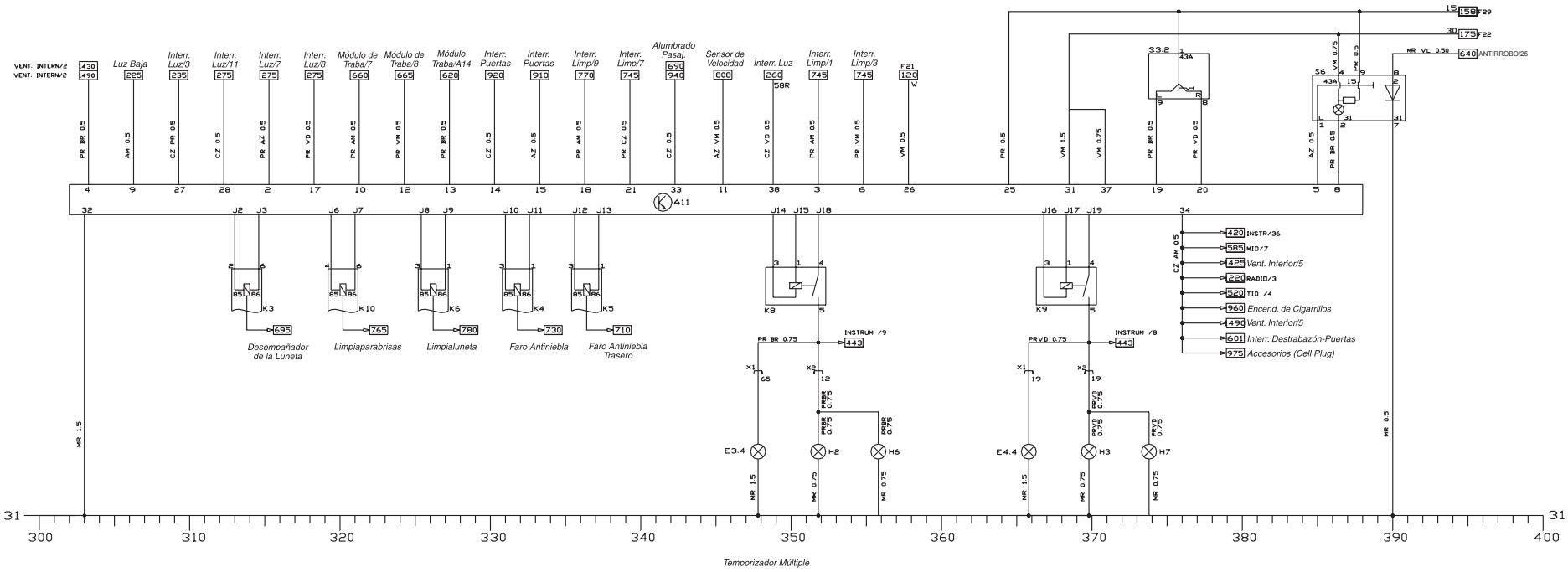

Temporizador Múltiple

Cores - Fios / Colores - Alambres / Wires - Colors													
PR= Preto	**MR = Marrom**	**AZ = Azul**	**CZ = Cinza**	**VD= Verde**	***ORN= Laranja***	***PNK = Rosa***	***VL= Violeta***	***VM = Vermelho***	***TAN= Beje***	***BR = Branco***	***AM= Amarelo***	***LT = Claro***	***DK = Escuro***
Negro / Black	*Marrón / Brown*	*Azul / Blue*	*Gris / Gray*	*Verde / Green*	*Naranja /Orange*	*Rosa / Pink*	*Violeta / Purple*	*Rojo / Red*	*Beije / Tan*	*Blanco / White*	*Amarillo / Yellow*	*Claro / Light*	*Oscuro / Dark*

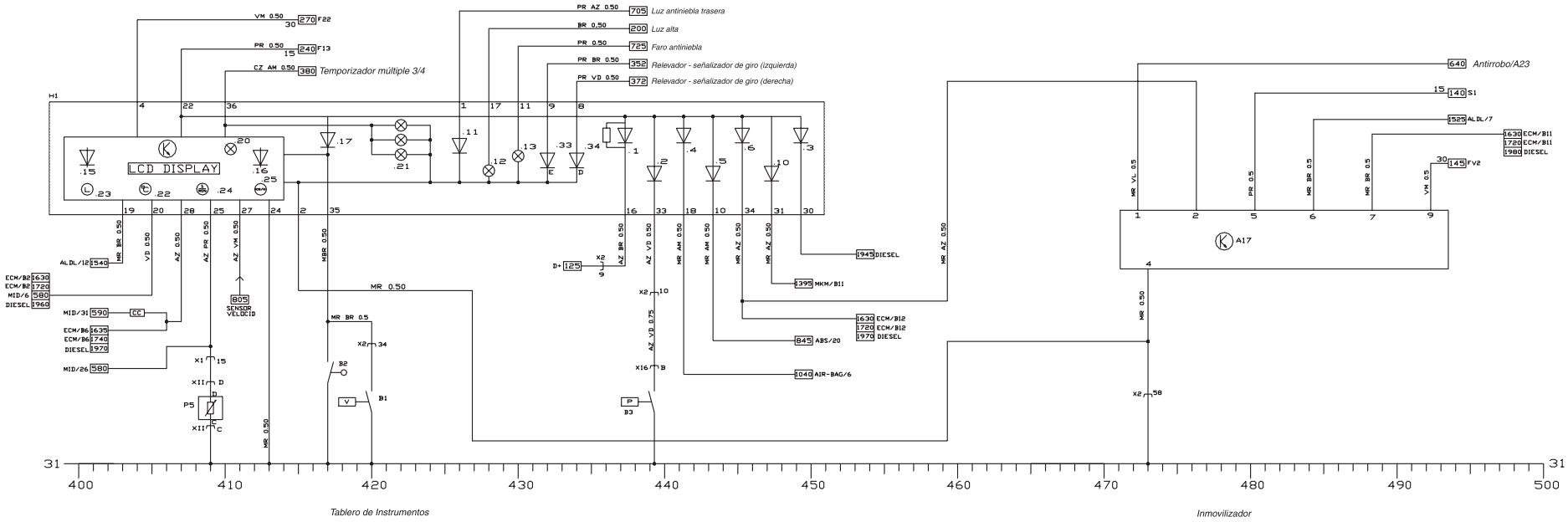

Cores - Fios / Colores - Alambres / Wires - Colors													
PR= Preto *Negro / Black*	**MR = Marrom** *Marrón / Brown*	**AZ = Azul** *Azul / Blue*	**CZ = Cinza** *Gris / Gray*	**VD= Verde** *Verde / Green*	***ORN= Laranja*** *Naranja /Orange*	***PNK = Rosa*** *Rosa / Pink*	***VL= Violeta*** *Violeta / Purple*	***VM = Vermelho*** *Rojo / Red*	***TAN= Beje*** *Beije / Tan*	***BR = Branco*** *Blanco / White*	***AM= Amarelo*** *Amarillo / Yellow*	***LT = Claro*** *Claro / Light*	***DK = Escuro*** *Oscuro / Dark*

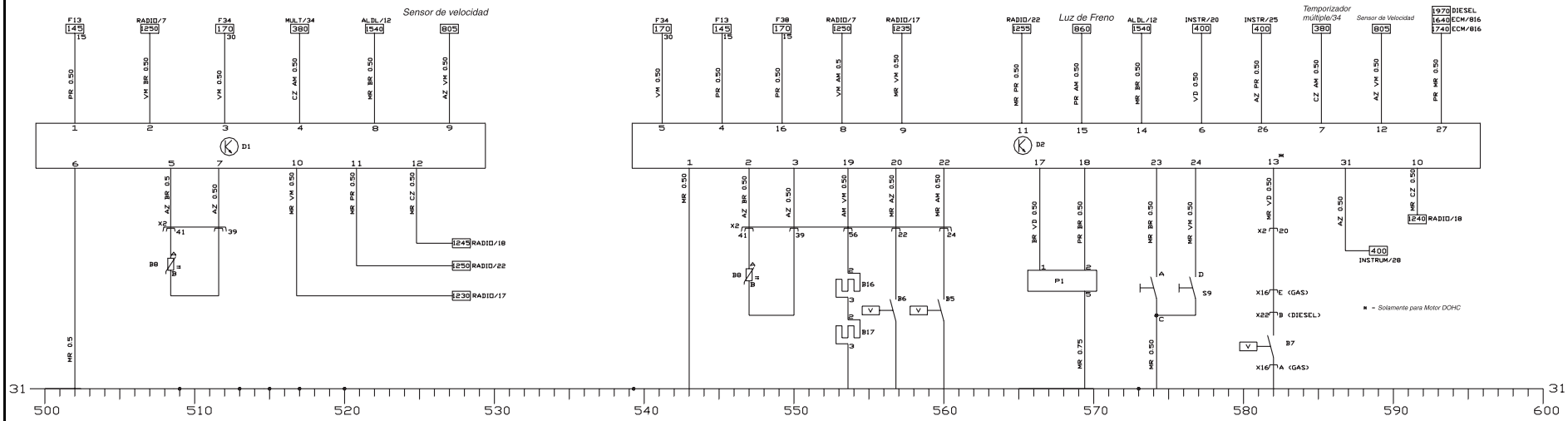

Pantalla de Función Triple (TID)

Pantalla de Funciones Múltiples (MID)

Cores - Fios / Colores - Alambres / Wires - Colors													
PR= Preto	***MR = Marrom***	***AZ = Azul***	***CZ = Cinza***	***VD= Verde***	***ORN= Laranja***	***PNK = Rosa***	***VL= Violeta***	***VM = Vermelho***	***TAN= Beje***	***BR = Branco***	***AM= Amarelo***	***LT = Claro***	***DK = Escuro***
Negro / Black	*Marrón / Brown*	*Azul / Blue*	*Gris / Gray*	*Verde / Green*	*Naranja /Orange*	*Rosa / Pink*	*Violeta / Purple*	*Rojo / Red*	*Beije / Tan*	*Blanco / White*	*Amarillo / Yellow*	*Claro / Light*	*Oscuro / Dark*

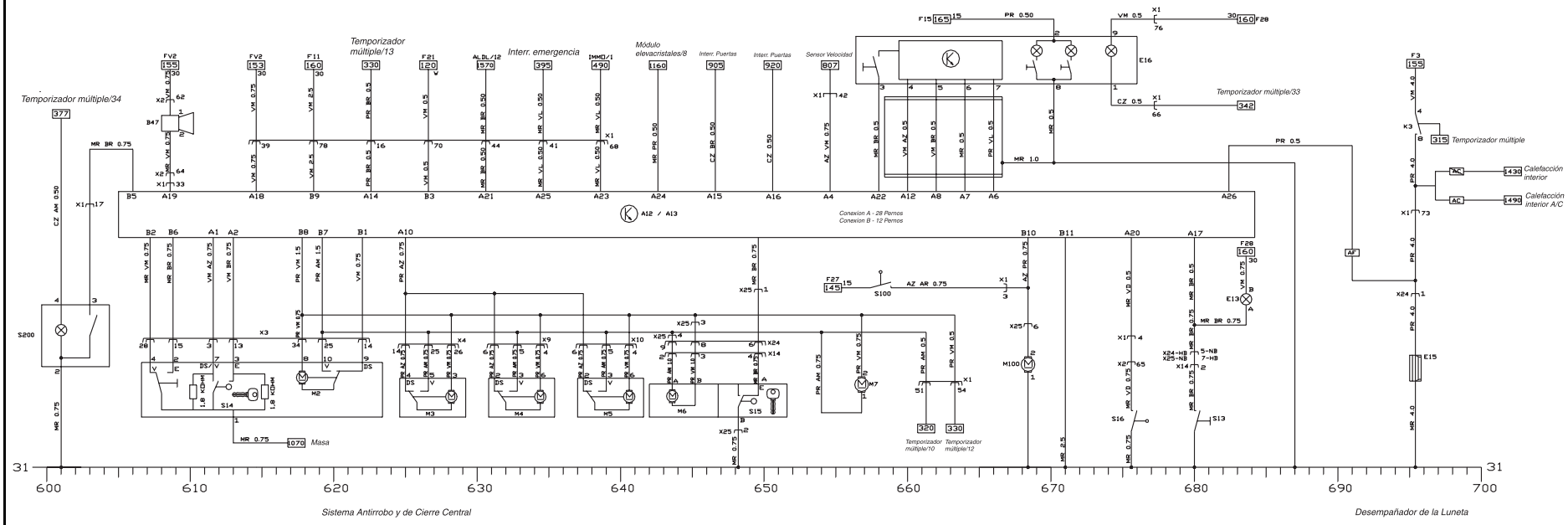

Cores - Fios / Colores - Alambres / Wires - Colors													
PR= Preto *Negro / Black*	**MR = Marrom** *Marrón / Brown*	**AZ = Azul** *Azul / Blue*	**CZ = Cinza** *Gris / Gray*	**VD= Verde** *Verde / Green*	***ORN= Laranja*** *Naranja /Orange*	***PNK = Rosa*** *Rosa / Pink*	***VL= Violeta*** *Violeta / Purple*	***VM = Vermelho*** *Rojo / Red*	***TAN= Beje*** *Beije / Tan*	***BR = Branco*** *Blanco / White*	***AM= Amarelo*** *Amarillo / Yellow*	***LT = Claro*** *Claro / Light*	***DK = Escuro*** *Oscuro / Dark*

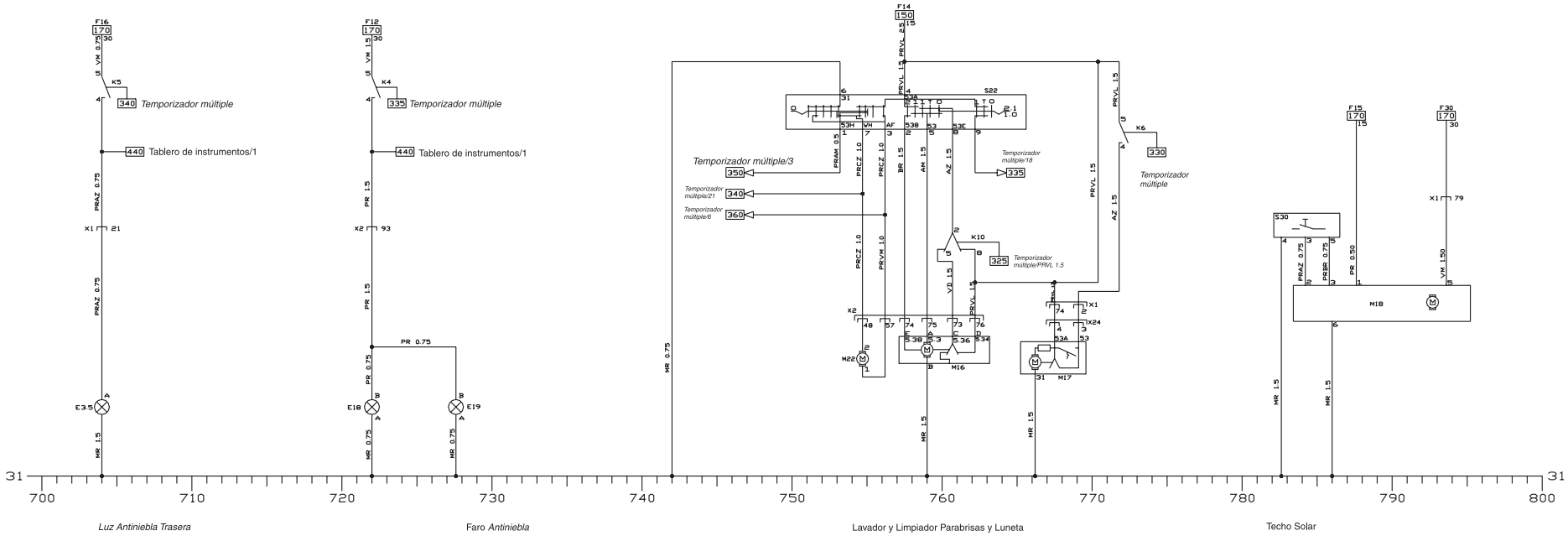

Cores - Fios / Colores - Alambres / Wires - Colors													
PR= Preto	**MR = Marrom**	**AZ = Azul**	**CZ = Cinza**	**VD= Verde**	***ORN= Laranja***	***PNK = Rosa***	***VL= Violeta***	***VM = Vermelho***	***TAN= Beje***	***BR = Branco***	***AM= Amarelo***	***LT = Claro***	***DK = Escuro***
Negro / Black	*Marrón / Brown*	*Azul / Blue*	*Gris / Gray*	*Verde / Green*	*Naranja /Orange*	*Rosa / Pink*	*Violeta / Purple*	*Rojo / Red*	*Beije / Tan*	*Blanco / White*	*Amarillo / Yellow*	*Claro / Light*	*Oscuro / Dark*

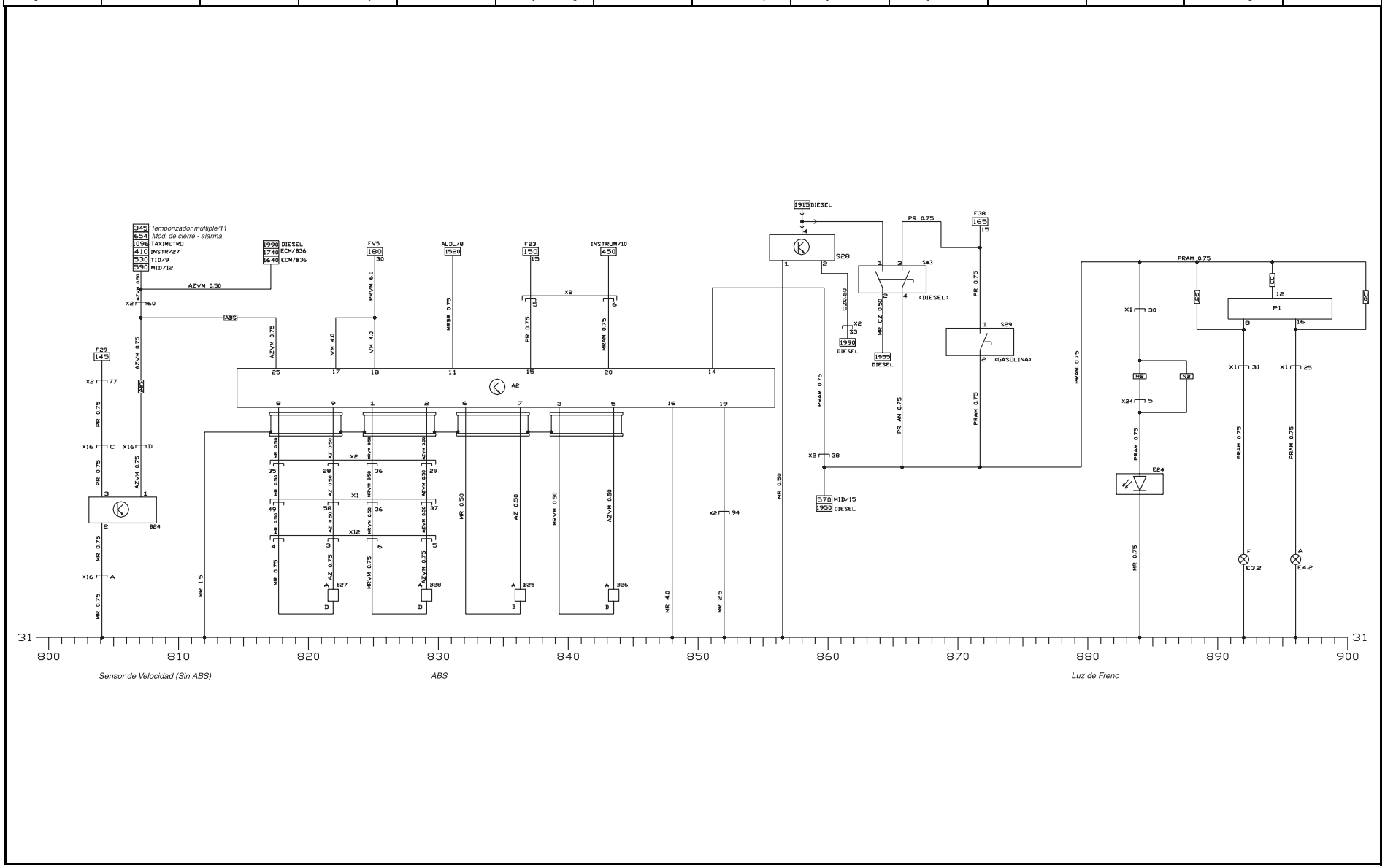

Cores - Fios / Colores - Alambres / Wires - Colors													
PR= Preto *Negro / Black*	**MR = Marrom** *Marrón / Brown*	**AZ = Azul** *Azul / Blue*	**CZ = Cinza** *Gris / Gray*	**VD= Verde** *Verde / Green*	***ORN= Laranja*** *Naranja /Orange*	***PNK = Rosa*** *Rosa / Pink*	***VL= Violeta*** *Violeta / Purple*	***VM = Vermelho*** *Rojo / Red*	***TAN= Beje*** *Beije / Tan*	***BR = Branco*** *Blanco / White*	***AM= Amarelo*** *Amarillo / Yellow*	***LT = Claro*** *Claro / Light*	***DK = Escuro*** *Oscuro / Dark*

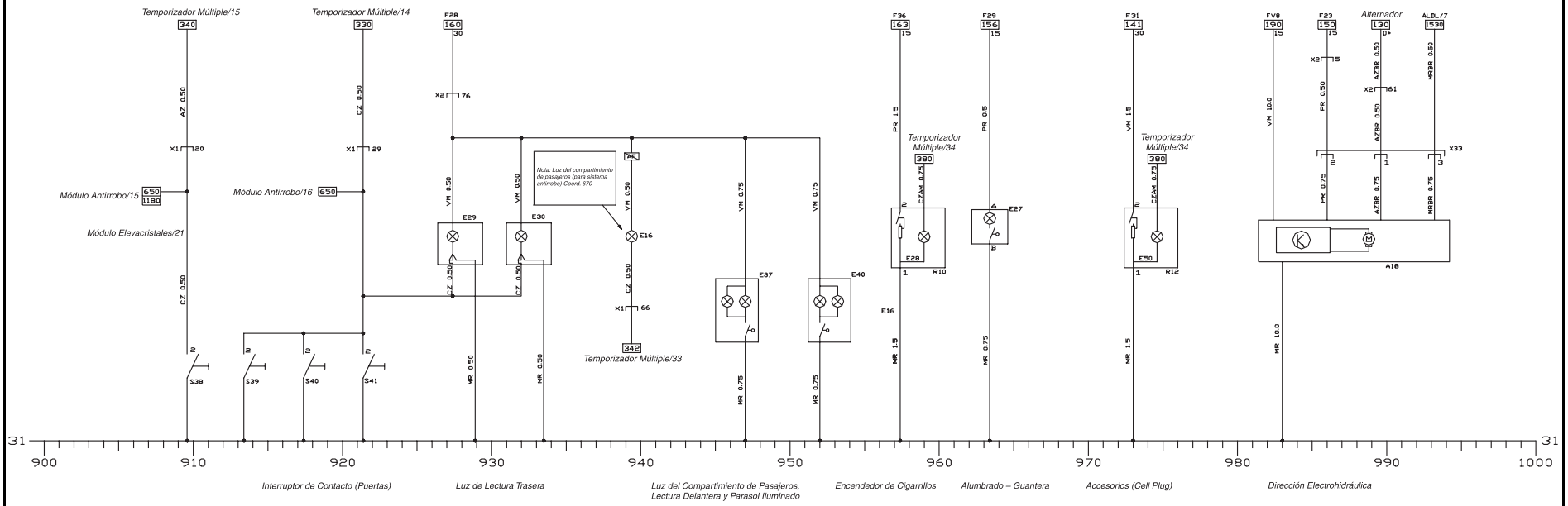

Cores - Fios / Colores - Alambres / Wires - Colors													
PR= Preto *Negro / Black*	**MR = Marrom** *Marrón / Brown*	**AZ = Azul** *Azul / Blue*	**CZ = Cinza** *Gris / Gray*	**VD= Verde** *Verde / Green*	***ORN= Laranja*** *Naranja /Orange*	***PNK = Rosa*** *Rosa / Pink*	***VL= Violeta*** *Violeta / Purple*	***VM = Vermelho*** *Rojo / Red*	***TAN= Beje*** *Beije / Tan*	***BR = Branco*** *Blanco / White*	***AM= Amarelo*** *Amarillo / Yellow*	***LT = Claro*** *Claro / Light*	***DK = Escuro*** *Oscuro / Dark*

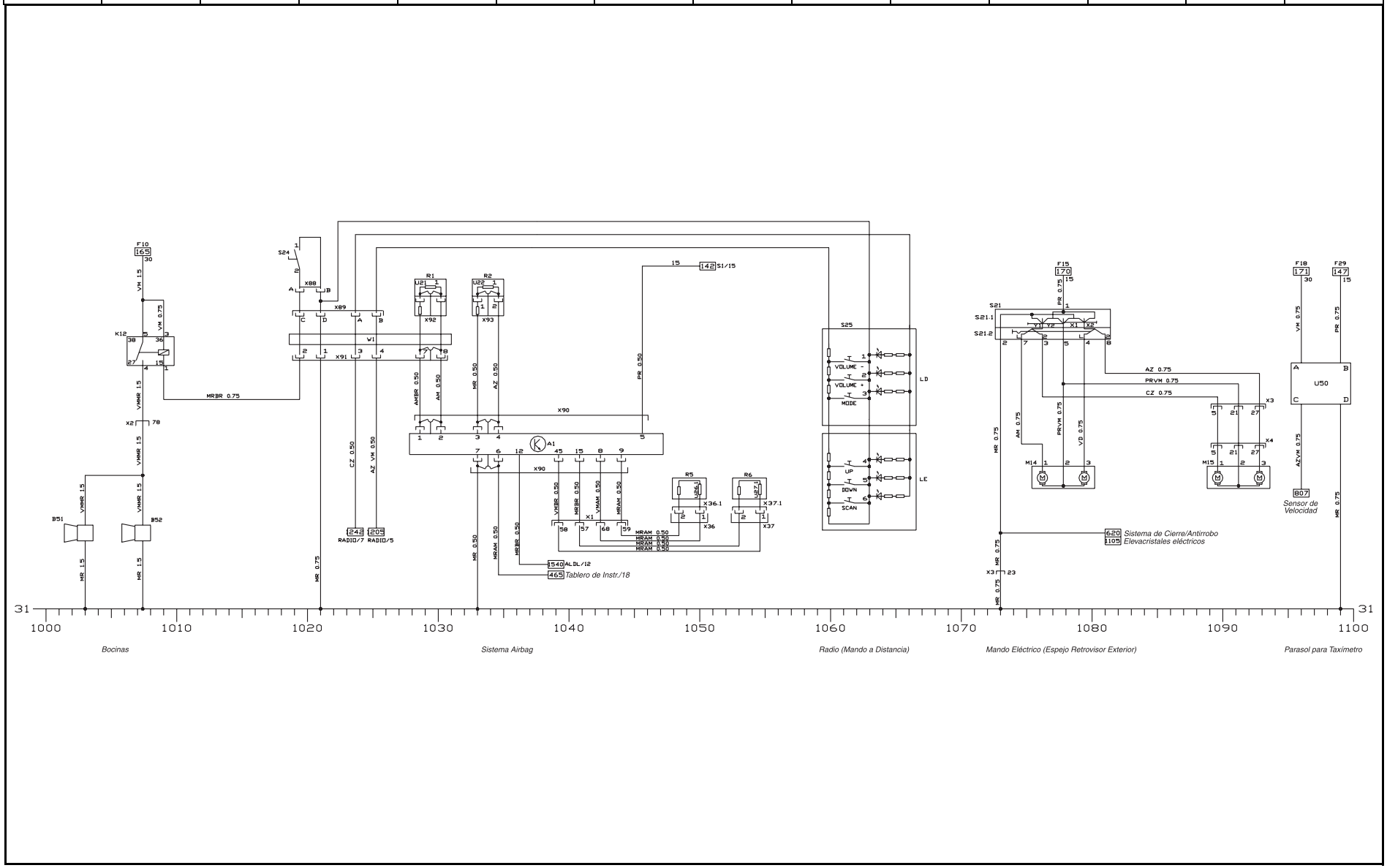

Cores - Fios / Colores - Alambres / Wires - Colors													
PR= Preto	***MR = Marrom***	***AZ = Azul***	***CZ = Cinza***	***VD= Verde***	***ORN= Laranja***	***PNK = Rosa***	***VL= Violeta***	***VM = Vermelho***	***TAN= Beje***	***BR = Branco***	***AM= Amarelo***	***LT = Claro***	***DK = Escuro***
Negro / Black	*Marrón / Brown*	*Azul / Blue*	*Gris / Gray*	*Verde / Green*	*Naranja /Orange*	*Rosa / Pink*	*Violeta / Purple*	*Rojo / Red*	*Beije / Tan*	*Blanco / White*	*Amarillo / Yellow*	*Claro / Light*	*Oscuro / Dark*

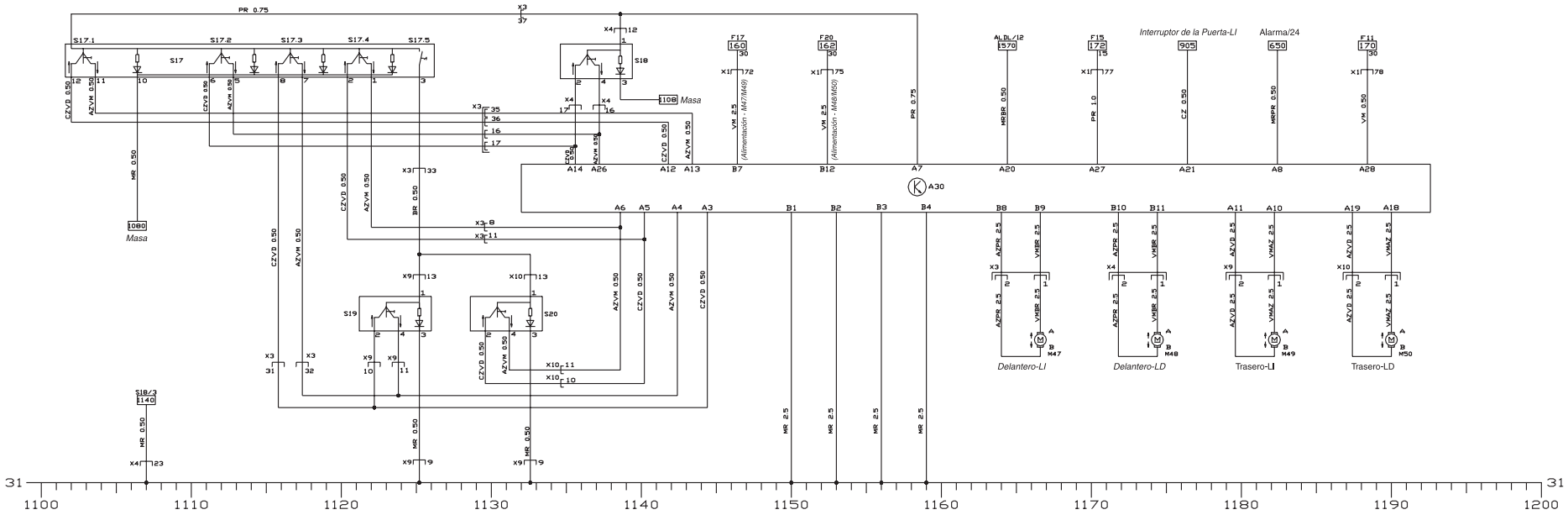

Sistema-Elevacristales Eléctrico (2 Puertas e 4 Puertas)

Cores - Fios / Colores - Alambres / Wires - Colors													
PR= Preto	***MR = Marrom***	***AZ = Azul***	***CZ = Cinza***	***VD= Verde***	***ORN= Laranja***	***PNK = Rosa***	***VL= Violeta***	***VM = Vermelho***	***TAN= Beje***	***BR = Branco***	***AM= Amarelo***	***LT = Claro***	***DK = Escuro***
Negro / Black	*Marrón / Brown*	*Azul / Blue*	*Gris / Gray*	*Verde / Green*	*Naranja /Orange*	*Rosa / Pink*	*Violeta / Purple*	*Rojo / Red*	*Beije / Tan*	*Blanco / White*	*Amarillo / Yellow*	*Claro / Light*	*Oscuro / Dark*

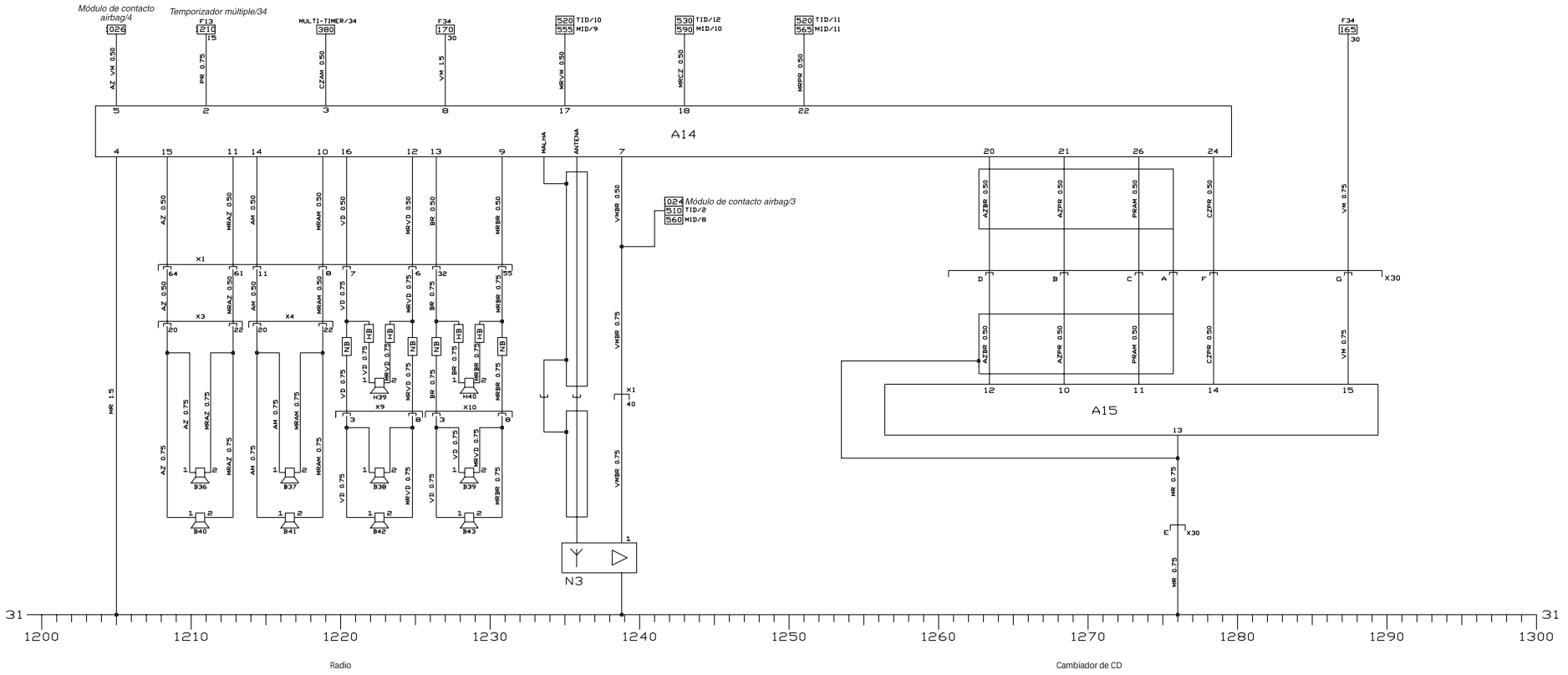

Cores - Fios / Colores - Alambres / Wires - Colors													
PR= Preto	**MR = Marrom**	**AZ = Azul**	**CZ = Cinza**	**VD= Verde**	***ORN= Laranja***	***PNK = Rosa***	***VL= Violeta***	***VM = Vermelho***	***TAN= Beje***	**BR = Branco**	***AM= Amarelo***	***LT = Claro***	***DK = Escuro***
Negro / Black	*Marrón / Brown*	*Azul / Blue*	*Gris / Gray*	*Verde / Green*	*Naranja /Orange*	*Rosa / Pink*	*Violeta / Purple*	*Rojo / Red*	*Beije / Tan*	*Blanco / White*	*Amarillo / Yellow*	*Claro / Light*	*Oscuro / Dark*

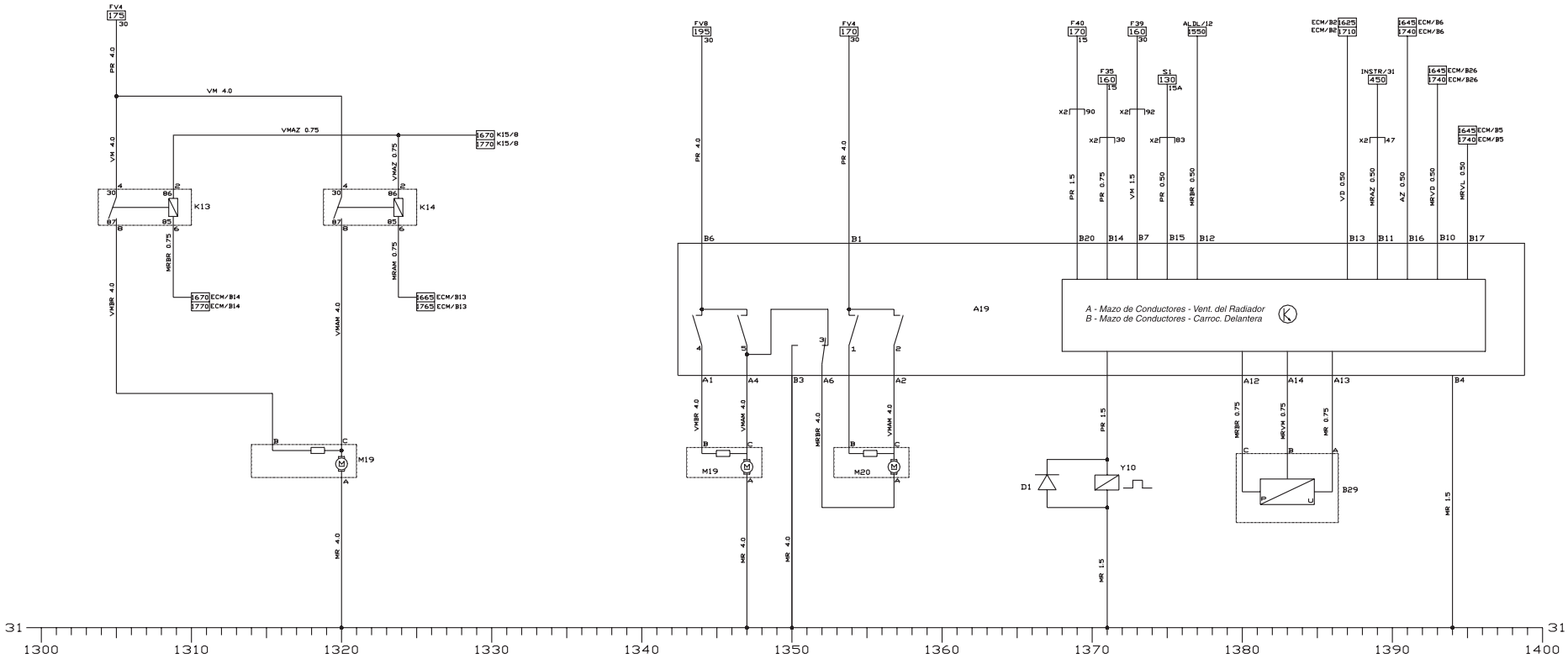

Ventilador – Radiador – (Gasolina) (Sin Acondicionador de Aire)

Ventilador – Radiador – (Sin Acondicionador de Aire) – (Gasolina) – (MKM)

Hasta Año/Modelo 2000

Cores - Fios / Colores - Alambres / Wires - Colors													
PR= Preto *Negro / Black*	**MR = Marrom** *Marrón / Brown*	**AZ = Azul** *Azul / Blue*	**CZ = Cinza** *Gris / Gray*	**VD= Verde** *Verde / Green*	***ORN= Laranja*** *Naranja /Orange*	***PNK = Rosa*** *Rosa / Pink*	***VL= Violeta*** *Violeta / Purple*	***VM = Vermelho*** *Rojo / Red*	***TAN= Beje*** *Beije / Tan*	***BR = Branco*** *Blanco / White*	***AM= Amarelo*** *Amarillo / Yellow*	***LT = Claro*** *Claro / Light*	***DK = Escuro*** *Oscuro / Dark*

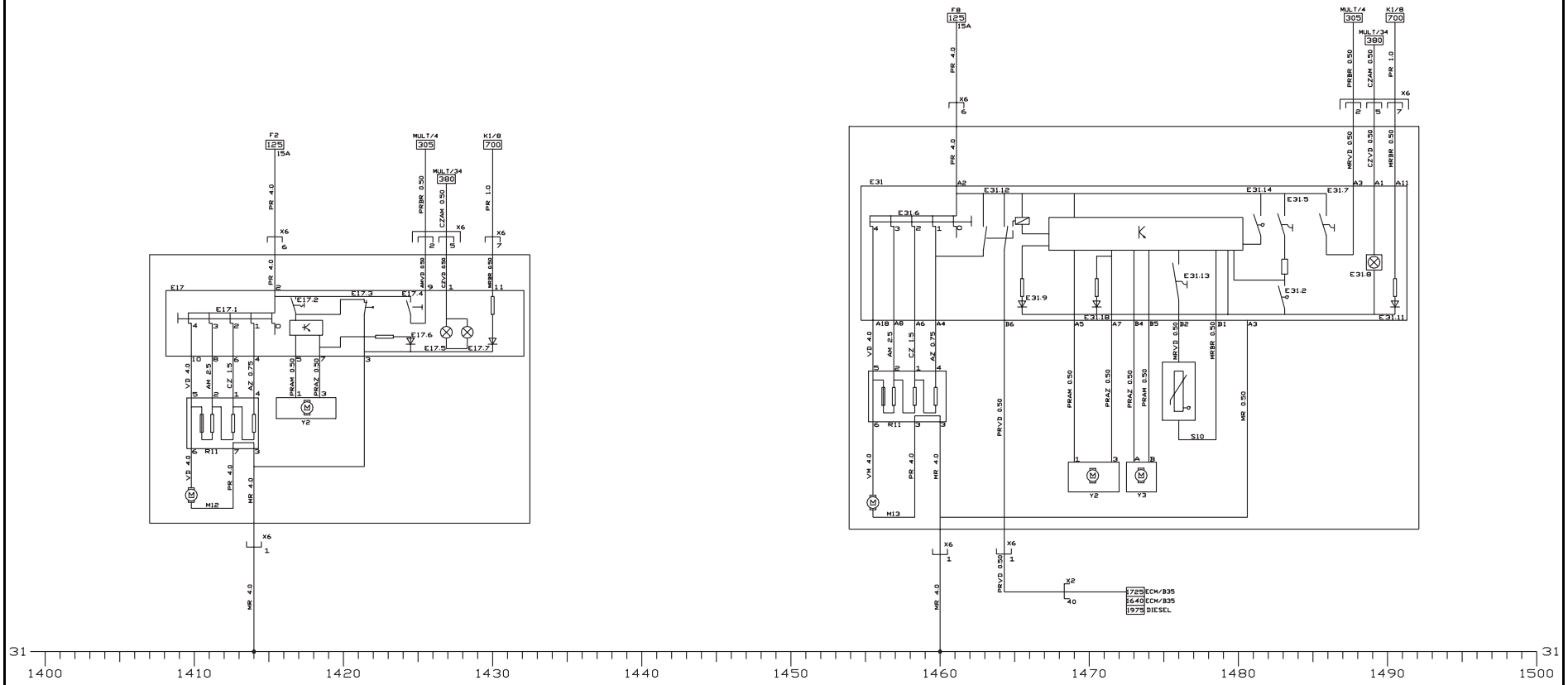

Cores - Fios / Colores - Alambres / Wires - Colors													
PR= Preto *Negro / Black*	**MR = Marrom** *Marrón / Brown*	**AZ = Azul** *Azul / Blue*	**CZ = Cinza** *Gris / Gray*	**VD= Verde** *Verde / Green*	***ORN= Laranja*** *Naranja /Orange*	***PNK = Rosa*** *Rosa / Pink*	***VL= Violeta*** *Violeta / Purple*	***VM = Vermelho*** *Rojo / Red*	***TAN= Beje*** *Beije / Tan*	***BR = Branco*** *Blanco / White*	***AM= Amarelo*** *Amarillo / Yellow*	***LT = Claro*** *Claro / Light*	***DK = Escuro*** *Oscuro / Dark*

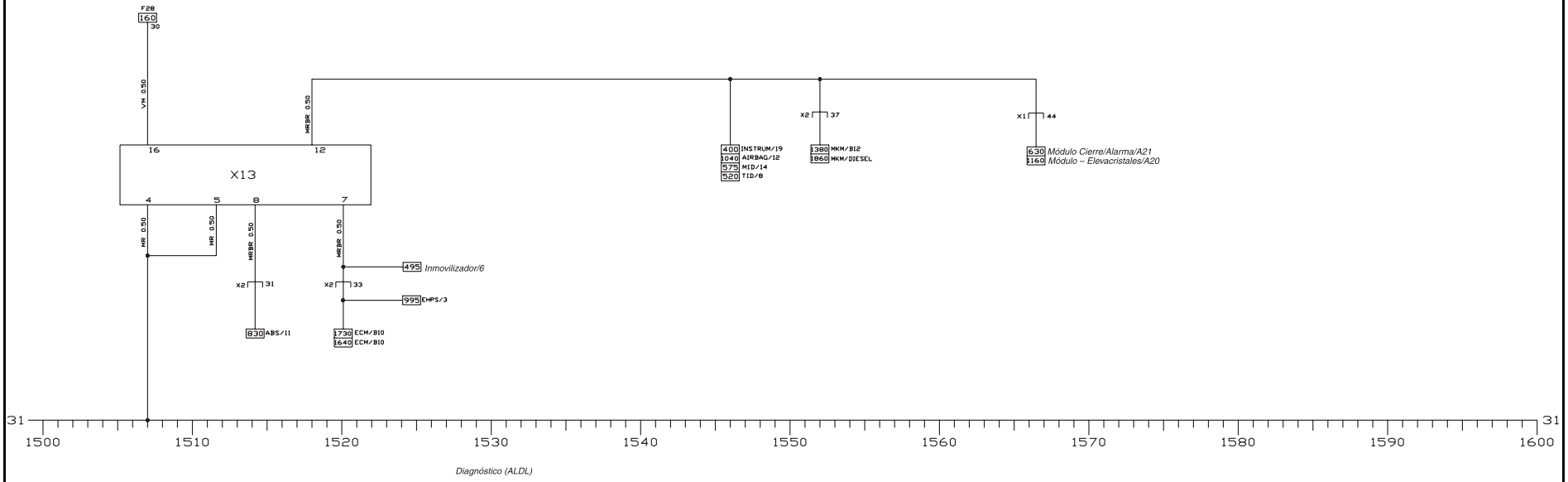

Diagnóstico (ALDL)

Cores - Fios / Colores - Alambres / Wires - Colors													
PR= Preto	**MR = Marrom**	**AZ = Azul**	**CZ = Cinza**	**VD= Verde**	***ORN= Laranja***	***PNK = Rosa***	***VL= Violeta***	***VM = Vermelho***	***TAN= Beje***	***BR = Branco***	***AM= Amarelo***	***LT = Claro***	***DK = Escuro***
Negro / Black	*Marrón / Brown*	*Azul / Blue*	*Gris / Gray*	*Verde / Green*	*Naranja /Orange*	*Rosa / Pink*	*Violeta / Purple*	*Rojo / Red*	*Beije / Tan*	*Blanco / White*	*Amarillo / Yellow*	*Claro / Light*	*Oscuro / Dark*

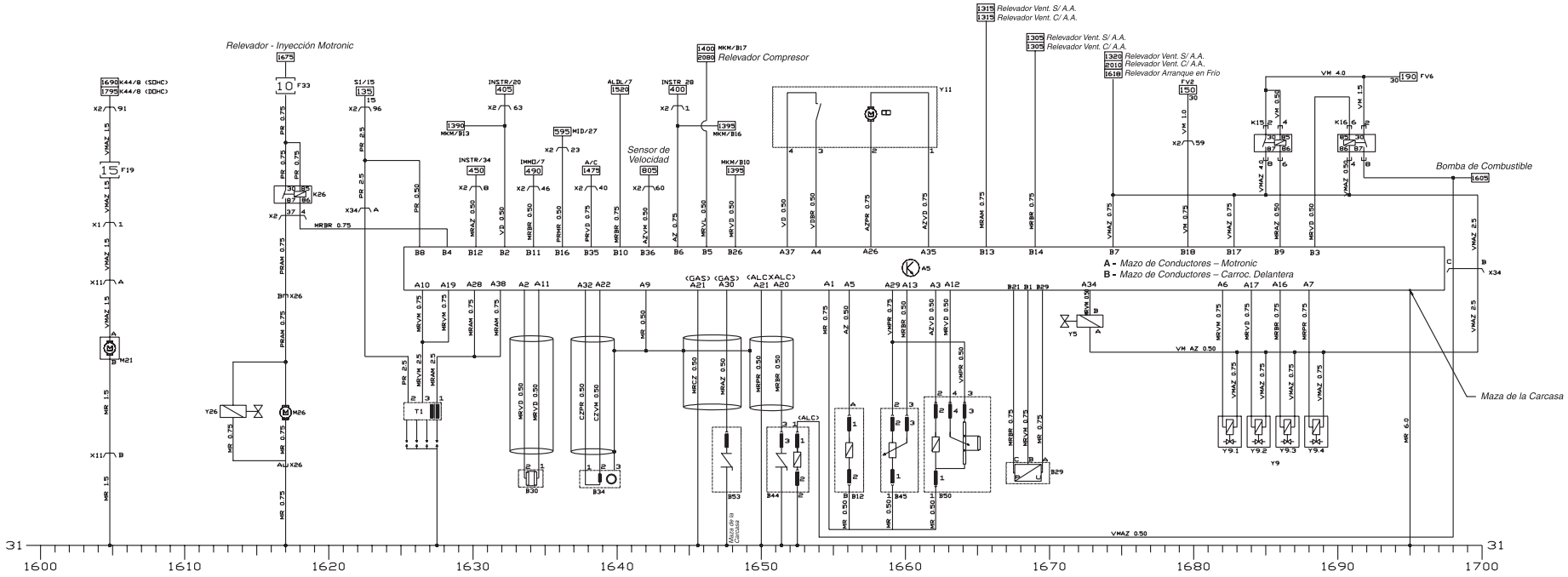

Bomba de Combustible

Sistema de Inyección – Motronic M1.5.5 (Gasolina/Alcool) – (SOHC)

Cores - Fios / Colores - Alambres / Wires - Colors													
PR= Preto	***MR = Marrom***	***AZ = Azul***	***CZ = Cinza***	***VD= Verde***	***ORN= Laranja***	***PNK = Rosa***	***VL= Violeta***	***VM = Vermelho***	***TAN= Beje***	***BR = Branco***	***AM= Amarelo***	***LT = Claro***	***DK = Escuro***
Negro / Black	*Marrón / Brown*	*Azul / Blue*	*Gris / Gray*	*Verde / Green*	*Naranja /Orange*	*Rosa / Pink*	*Violeta / Purple*	*Rojo / Red*	*Beije / Tan*	*Blanco / White*	*Amarillo / Yellow*	*Claro / Light*	*Oscuro / Dark*

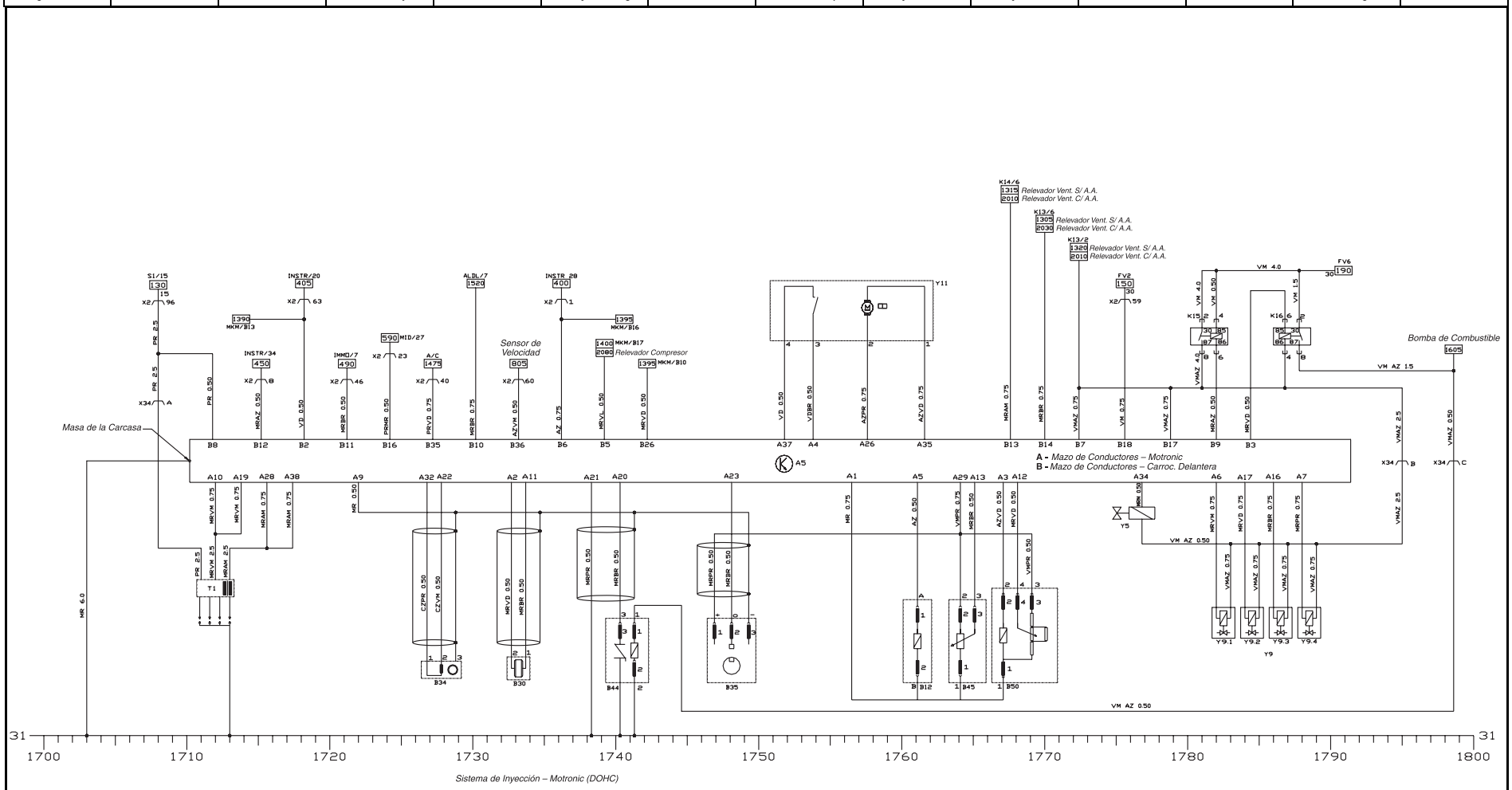

Sistema de Inyección – Motronic (DOHC)

Cores - Fios / Colores - Alambres / Wires - Colors													
PR= Preto *Negro / Black*	**MR = Marrom** *Marrón / Brown*	**AZ = Azul** *Azul / Blue*	**CZ = Cinza** *Gris / Gray*	**VD= Verde** *Verde / Green*	***ORN= Laranja*** *Naranja /Orange*	***PNK = Rosa*** *Rosa / Pink*	***VL= Violeta*** *Violeta / Purple*	***VM = Vermelho*** *Rojo / Red*	***TAN= Beje*** *Beije / Tan*	***BR = Branco*** *Blanco / White*	***AM= Amarelo*** *Amarillo / Yellow*	***LT = Claro*** *Claro / Light*	***DK = Escuro*** *Oscuro / Dark*

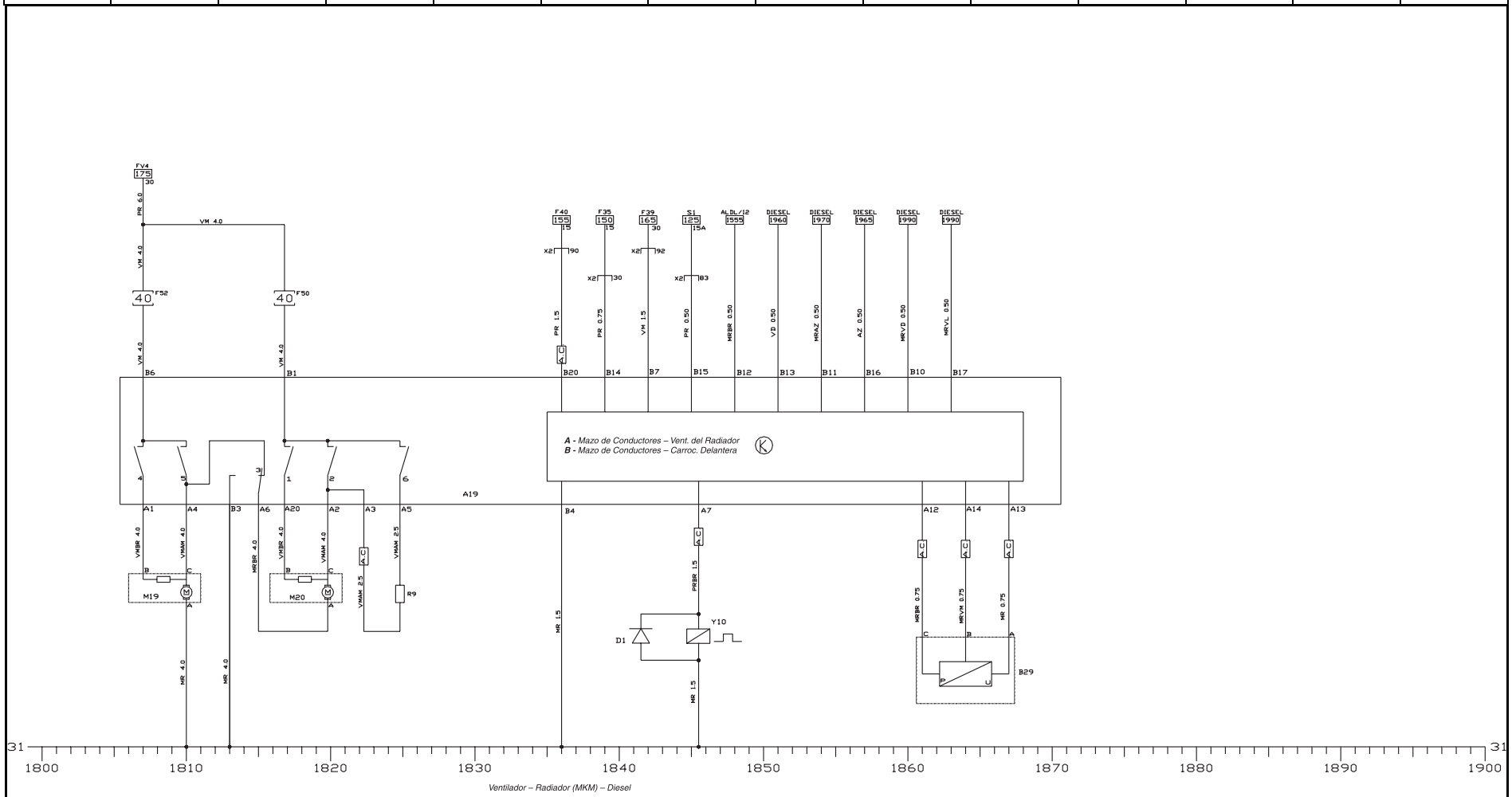

Ventilador – Radiador (MKM) – Diesel

Cores - Fios / Colores - Alambres / Wires - Colors													
PR= Preto	**MR = Marrom**	**AZ = Azul**	**CZ = Cinza**	**VD= Verde**	***ORN= Laranja***	***PNK = Rosa***	***VL= Violeta***	***VM = Vermelho***	***TAN= Beje***	***BR = Branco***	***AM= Amarelo***	***LT = Claro***	***DK = Escuro***
Negro / Black	*Marrón / Brown*	*Azul / Blue*	*Gris / Gray*	*Verde / Green*	*Naranja /Orange*	*Rosa / Pink*	*Violeta / Purple*	*Rojo / Red*	*Beije / Tan*	*Blanco / White*	*Amarillo / Yellow*	*Claro / Light*	*Oscuro / Dark*

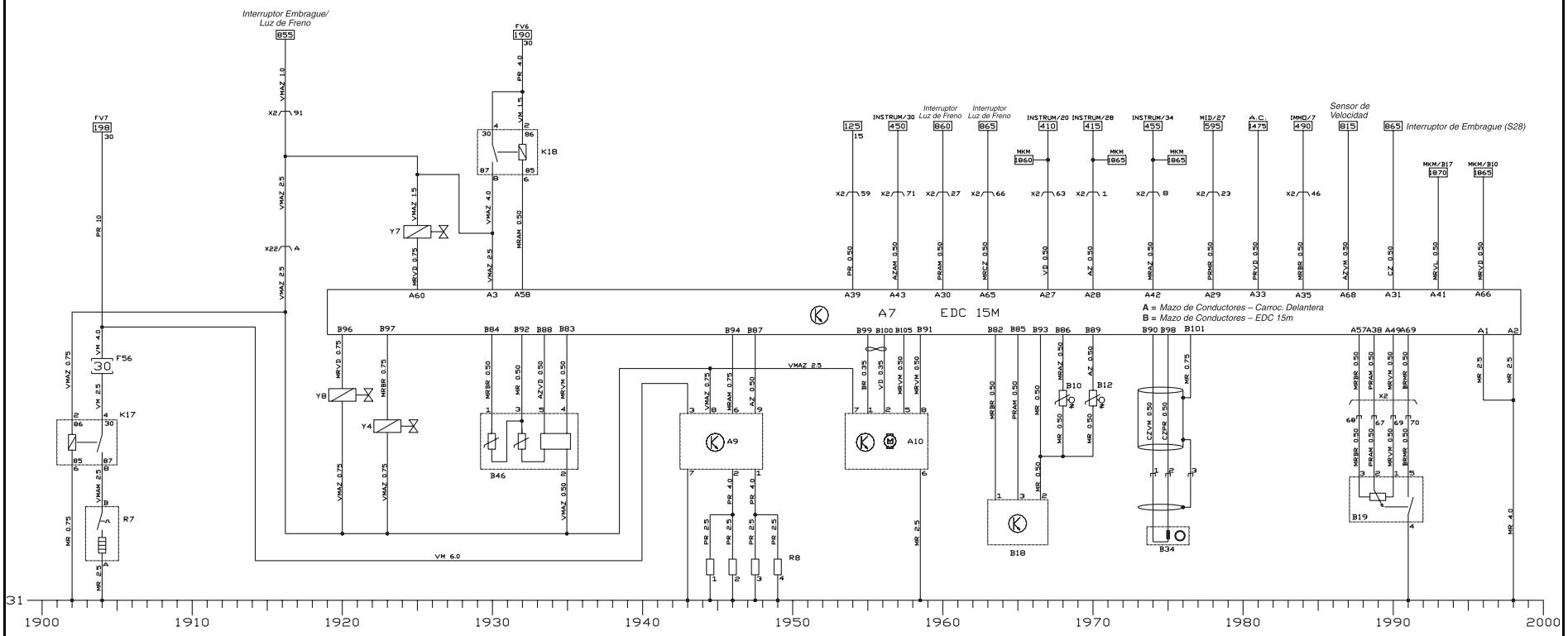

Sistema – Motor Diesel (X20DTL)

Cores - Fios / Colores - Alambres / Wires - Colors													
PR= Preto *Negro / Black*	**MR = Marrom** *Marrón / Brown*	**AZ = Azul** *Azul / Blue*	**CZ = Cinza** *Gris / Gray*	**VD= Verde** *Verde / Green*	***ORN= Laranja*** *Naranja /Orange*	***PNK = Rosa*** *Rosa / Pink*	***VL= Violeta*** *Violeta / Purple*	***VM = Vermelho*** *Rojo / Red*	***TAN= Beje*** *Beije / Tan*	***BR = Branco*** *Blanco / White*	***AM= Amarelo*** *Amarillo / Yellow*	***LT = Claro*** *Claro / Light*	***DK = Escuro*** *Oscuro / Dark*

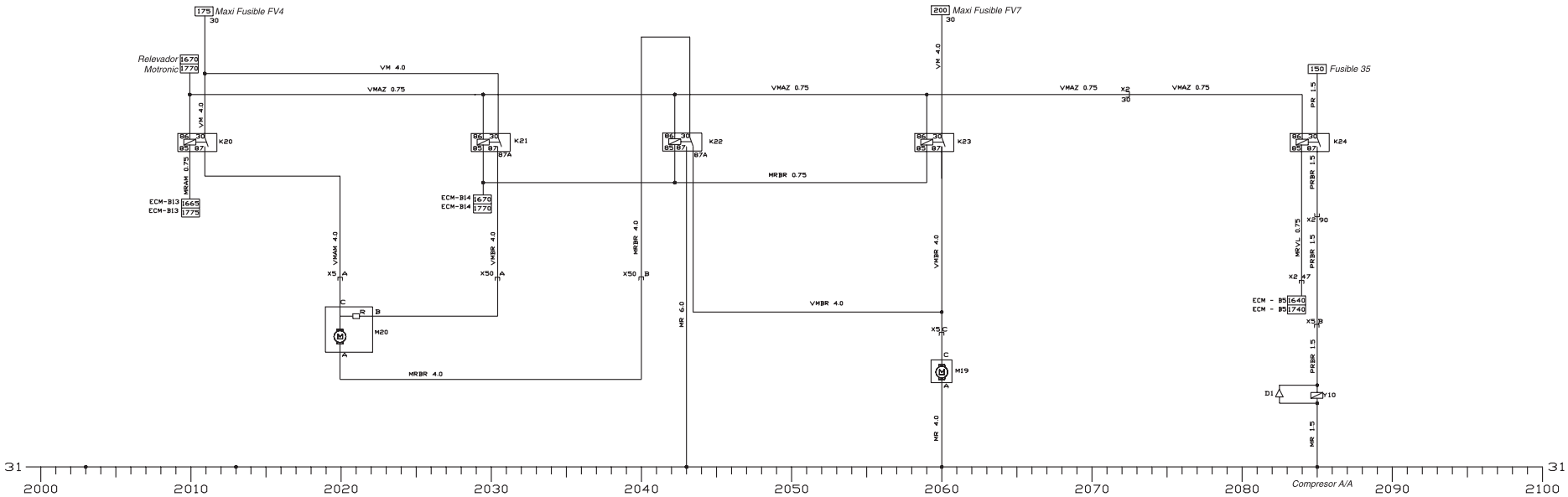

Ventilador del Radiador – Gasolina/Alcool
(Con Acondicionador de Aire)

Cores - Fios / Colores - Alambres / Wires - Colors													
PR= Preto	**MR = Marrom**	**AZ = Azul**	**CZ = Cinza**	**VD= Verde**	***ORN= Laranja***	***PNK = Rosa***	***VL= Violeta***	***VM = Vermelho***	***TAN= Beje***	***BR = Branco***	***AM= Amarelo***	***LT = Claro***	***DK = Escuro***
Negro / Black	*Marrón / Brown*	*Azul / Blue*	*Gris / Gray*	*Verde / Green*	*Naranja /Orange*	*Rosa / Pink*	*Violeta / Purple*	*Rojo / Red*	*Beije / Tan*	*Blanco / White*	*Amarillo / Yellow*	*Claro / Light*	*Oscuro / Dark*

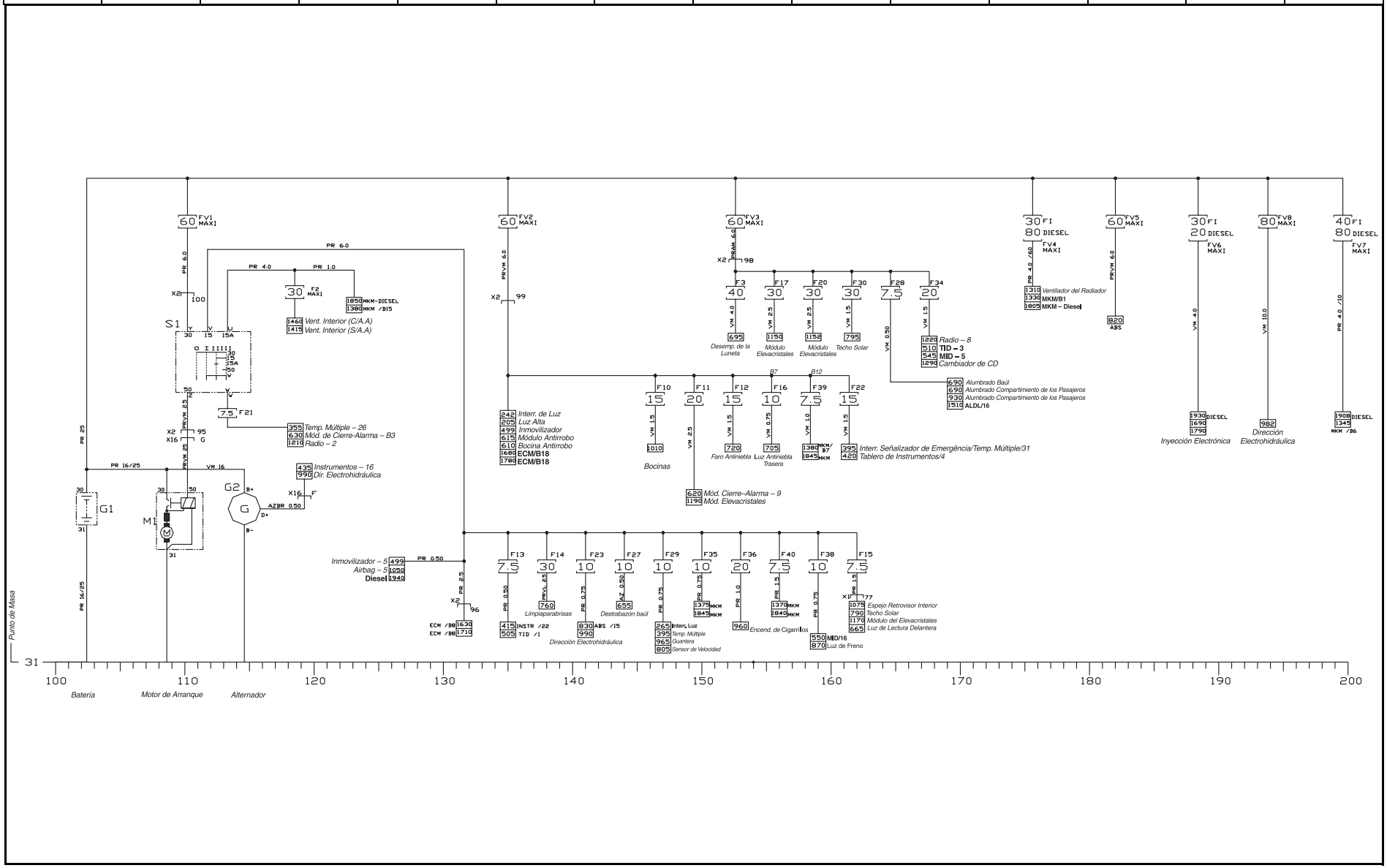

Cores - Fios / Colores - Alambres / Wires - Colors													
PR= Preto *Negro / Black*	**MR = Marrom** *Marrón / Brown*	**AZ = Azul** *Azul / Blue*	**CZ = Cinza** *Gris / Gray*	**VD= Verde** *Verde / Green*	***ORN= Laranja*** *Naranja /Orange*	***PNK = Rosa*** *Rosa / Pink*	***VL= Violeta*** *Violeta / Purple*	***VM = Vermelho*** *Rojo / Red*	***TAN= Beje*** *Beije / Tan*	***BR = Branco*** *Blanco / White*	***AM= Amarelo*** *Amarillo / Yellow*	***LT = Claro*** *Claro / Light*	***DK = Escuro*** *Oscuro / Dark*

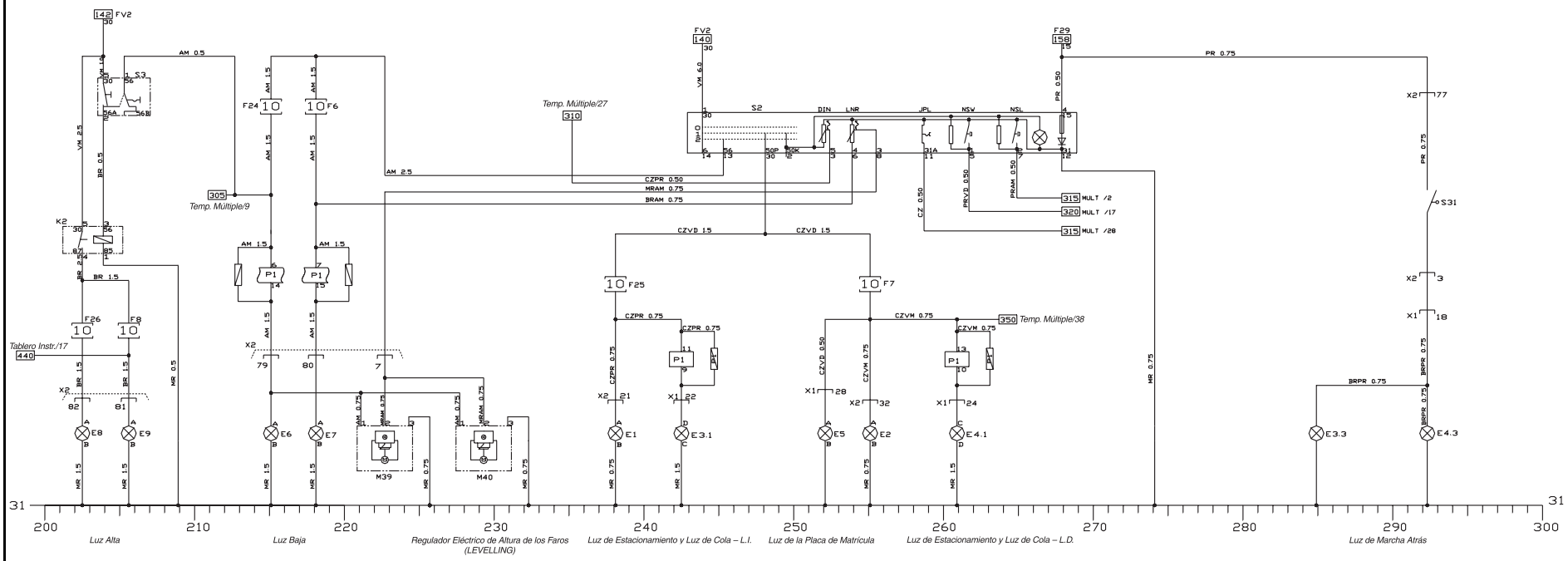

Cores - Fios / Colores - Alambres / Wires - Colors													
PR= Preto	**MR = Marrom**	**AZ = Azul**	**CZ = Cinza**	**VD= Verde**	***ORN= Laranja***	***PNK = Rosa***	***VL= Violeta***	***VM = Vermelho***	***TAN= Beje***	***BR = Branco***	***AM= Amarelo***	***LT = Claro***	***DK = Escuro***
Negro / Black	*Marrón / Brown*	*Azul / Blue*	*Gris / Gray*	*Verde / Green*	*Naranja /Orange*	*Rosa / Pink*	*Violeta / Purple*	*Rojo / Red*	*Beije / Tan*	*Blanco / White*	*Amarillo / Yellow*	*Claro / Light*	*Oscuro / Dark*

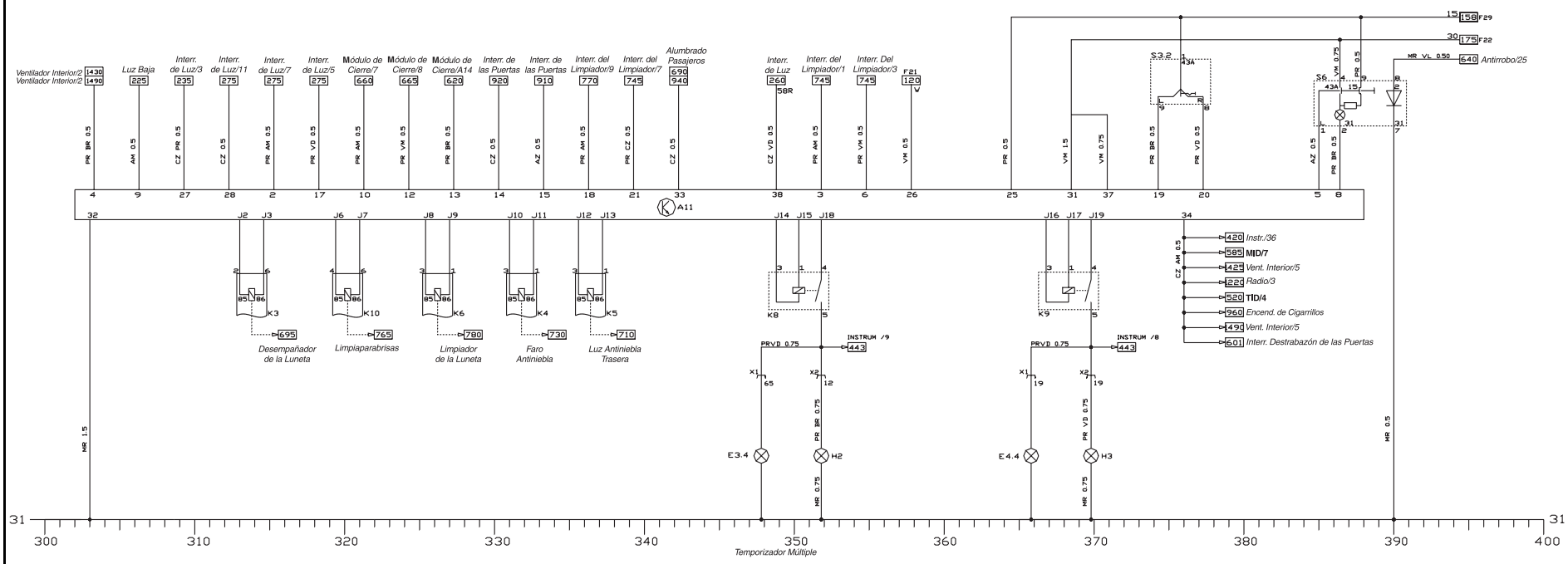

Cores - Fios / Colores - Alambres / Wires - Colors													
PR= Preto *Negro / Black*	**MR = Marrom** *Marrón / Brown*	**AZ = Azul** *Azul / Blue*	**CZ = Cinza** *Gris / Gray*	**VD= Verde** *Verde / Green*	***ORN= Laranja*** *Naranja /Orange*	***PNK = Rosa*** *Rosa / Pink*	***VL= Violeta*** *Violeta / Purple*	***VM = Vermelho*** *Rojo / Red*	***TAN= Beje*** *Beije / Tan*	***BR = Branco*** *Blanco / White*	***AM= Amarelo*** *Amarillo / Yellow*	***LT = Claro*** *Claro / Light*	***DK = Escuro*** *Oscuro / Dark*

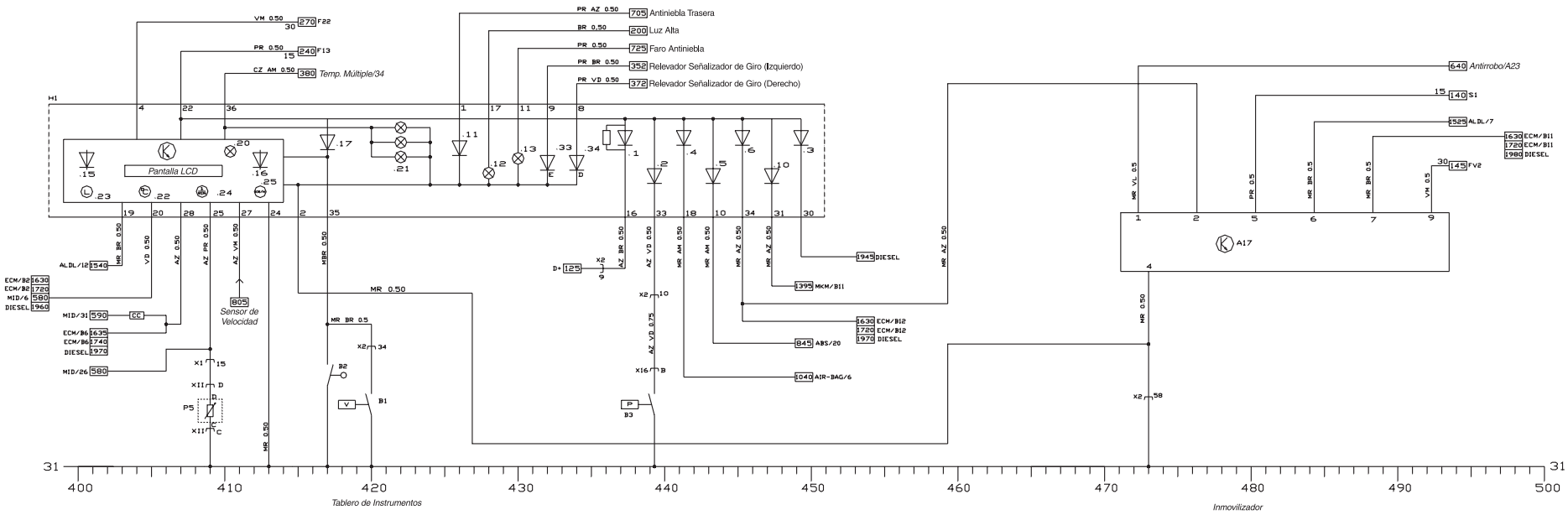

Cores - Fios / Colores - Alambres / Wires - Colors													
PR= Preto *Negro / Black*	**MR = Marrom** *Marrón / Brown*	**AZ = Azul** *Azul / Blue*	**CZ = Cinza** *Gris / Gray*	**VD= Verde** *Verde / Green*	***ORN= Laranja*** *Naranja /Orange*	***PNK = Rosa*** *Rosa / Pink*	***VL= Violeta*** *Violeta / Purple*	***VM = Vermelho*** *Rojo / Red*	***TAN= Beje*** *Beije / Tan*	***BR = Branco*** *Blanco / White*	***AM= Amarelo*** *Amarillo / Yellow*	***LT = Claro*** *Claro / Light*	***DK = Escuro*** *Oscuro / Dark*

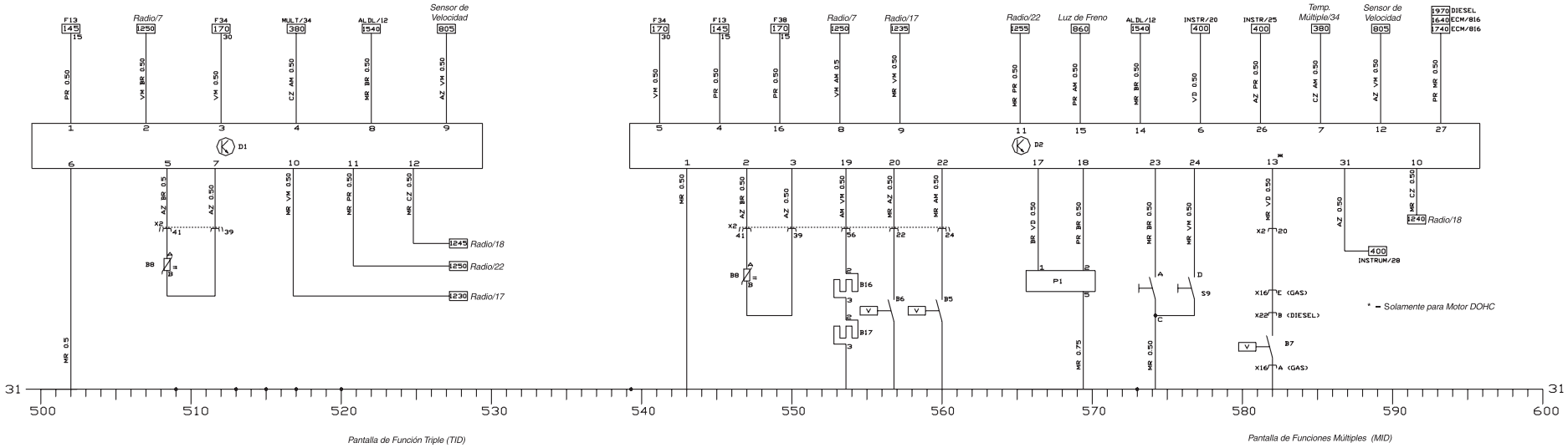

Cores - Fios / Colores - Alambres / Wires - Colors													
PR= Preto *Negro / Black*	**MR = Marrom** *Marrón / Brown*	**AZ = Azul** *Azul / Blue*	**CZ = Cinza** *Gris / Gray*	**VD= Verde** *Verde / Green*	***ORN= Laranja*** *Naranja /Orange*	***PNK = Rosa*** *Rosa / Pink*	***VL= Violeta*** *Violeta / Purple*	***VM = Vermelho*** *Rojo / Red*	***TAN= Beje*** *Beije / Tan*	***BR = Branco*** *Blanco / White*	***AM= Amarelo*** *Amarillo / Yellow*	***LT = Claro*** *Claro / Light*	***DK = Escuro*** *Oscuro / Dark*

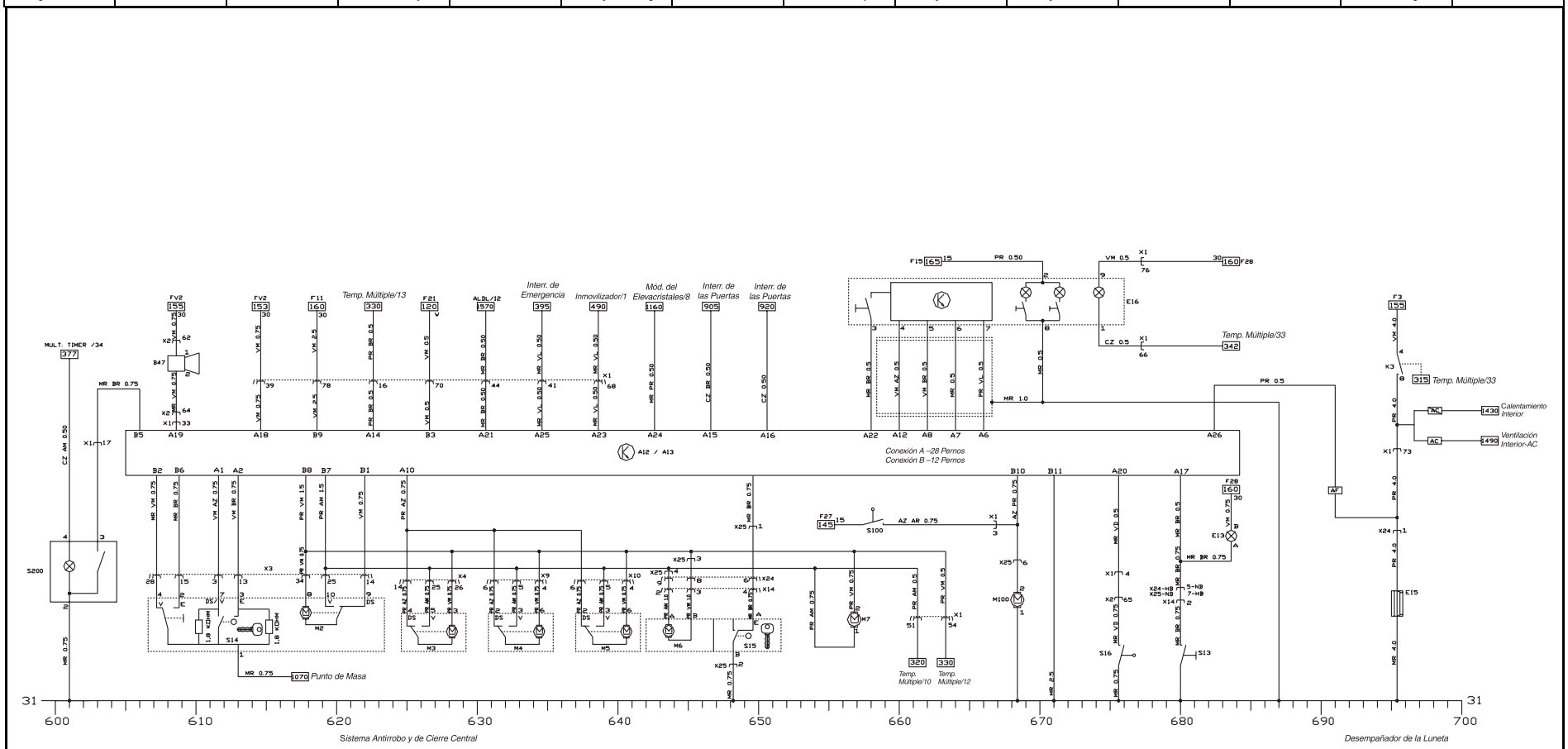

Cores - Fios / Colores - Alambres / Wires - Colors													
PR= Preto	**MR = Marrom**	**AZ = Azul**	**CZ = Cinza**	**VD= Verde**	***ORN= Laranja***	***PNK = Rosa***	***VL= Violeta***	***VM = Vermelho***	***TAN= Beje***	***BR = Branco***	***AM= Amarelo***	***LT = Claro***	***DK = Escuro***
Negro / Black	*Marrón / Brown*	*Azul / Blue*	*Gris / Gray*	*Verde / Green*	*Naranja /Orange*	*Rosa / Pink*	*Violeta / Purple*	*Rojo / Red*	*Beije / Tan*	*Blanco / White*	*Amarillo / Yellow*	*Claro / Light*	*Oscuro / Dark*

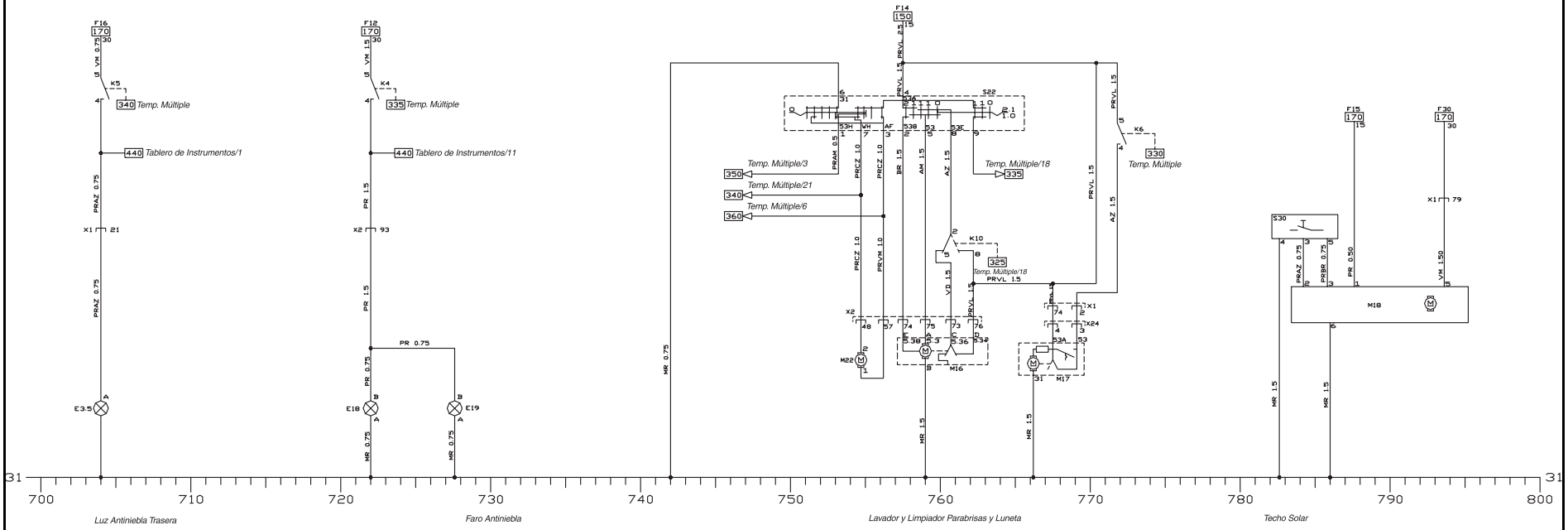

Cores - Fios / Colores - Alambres / Wires - Colors													
PR= Preto	**MR = Marrom**	**AZ = Azul**	**CZ = Cinza**	**VD= Verde**	***ORN= Laranja***	***PNK = Rosa***	***VL= Violeta***	***VM = Vermelho***	***TAN= Beje***	***BR = Branco***	***AM= Amarelo***	***LT = Claro***	***DK = Escuro***
Negro / Black	*Marrón / Brown*	*Azul / Blue*	*Gris / Gray*	*Verde / Green*	*Naranja /Orange*	*Rosa / Pink*	*Violeta / Purple*	*Rojo / Red*	*Beije / Tan*	*Blanco / White*	*Amarillo / Yellow*	*Claro / Light*	*Oscuro / Dark*

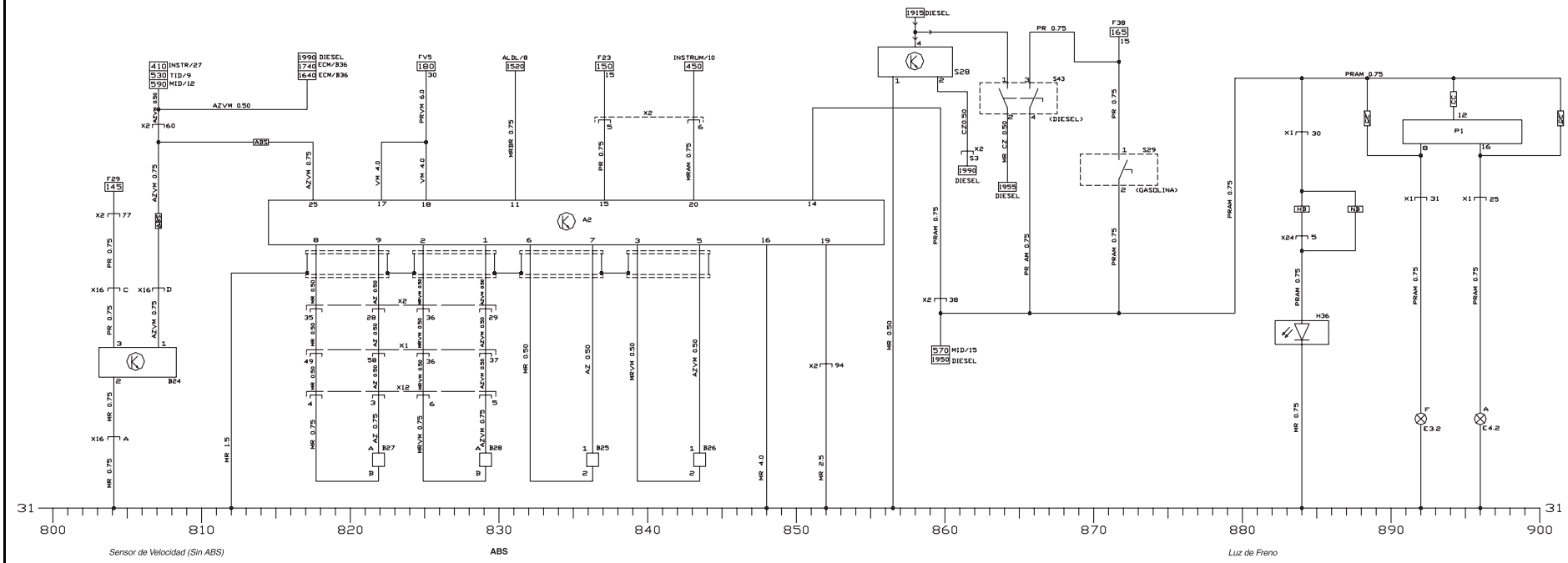

Cores - Fios / Colores - Alambres / Wires - Colors													
PR= Preto *Negro / Black*	**MR = Marrom** *Marrón / Brown*	**AZ = Azul** *Azul / Blue*	**CZ = Cinza** *Gris / Gray*	**VD= Verde** *Verde / Green*	***ORN= Laranja*** *Naranja /Orange*	***PNK = Rosa*** *Rosa / Pink*	***VL= Violeta*** *Violeta / Purple*	***VM = Vermelho*** *Rojo / Red*	***TAN= Beje*** *Beije / Tan*	***BR = Branco*** *Blanco / White*	***AM= Amarelo*** *Amarillo / Yellow*	***LT = Claro*** *Claro / Light*	***DK = Escuro*** *Oscuro / Dark*

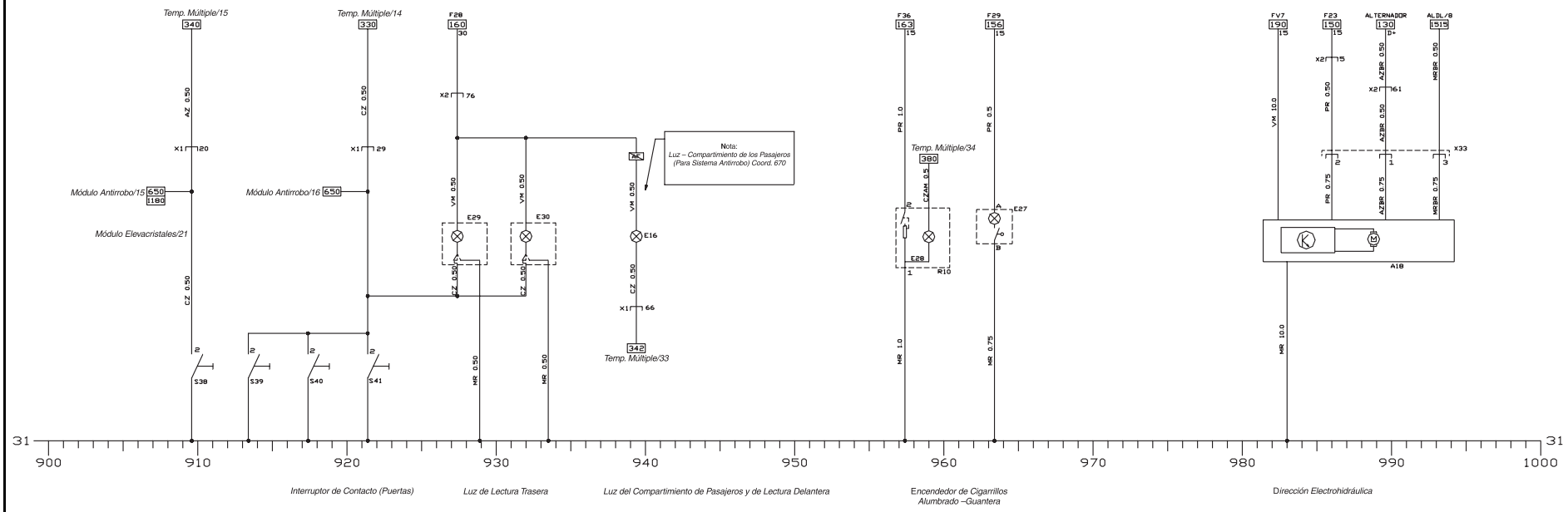

Cores - Fios / Colores - Alambres / Wires - Colors													
PR= Preto	**MR = Marrom**	**AZ = Azul**	**CZ = Cinza**	**VD= Verde**	***ORN= Laranja***	***PNK = Rosa***	***VL= Violeta***	***VM = Vermelho***	***TAN= Beje***	***BR = Branco***	***AM= Amarelo***	***LT = Claro***	***DK = Escuro***
Negro / Black	*Marrón / Brown*	*Azul / Blue*	*Gris / Gray*	*Verde / Green*	*Naranja /Orange*	*Rosa / Pink*	*Violeta / Purple*	*Rojo / Red*	*Beije / Tan*	*Blanco / White*	*Amarillo / Yellow*	*Claro / Light*	*Oscuro / Dark*

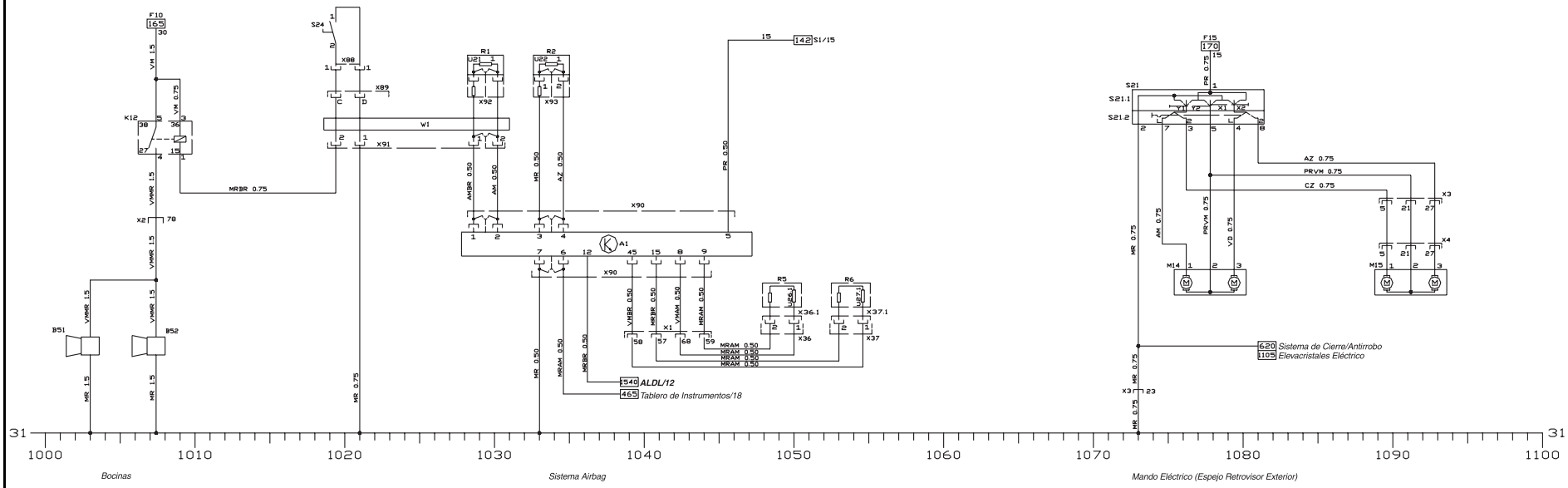

Cores - Fios / Colores - Alambres / Wires - Colors													
PR= Preto	**MR = Marrom**	**AZ = Azul**	**CZ = Cinza**	**VD= Verde**	***ORN= Laranja***	***PNK = Rosa***	***VL= Violeta***	***VM = Vermelho***	***TAN= Beje***	***BR = Branco***	***AM= Amarelo***	***LT = Claro***	***DK = Escuro***
Negro / Black	*Marrón / Brown*	*Azul / Blue*	*Gris / Gray*	*Verde / Green*	*Naranja /Orange*	*Rosa / Pink*	*Violeta / Purple*	*Rojo / Red*	*Beije / Tan*	*Blanco / White*	*Amarillo / Yellow*	*Claro / Light*	*Oscuro / Dark*

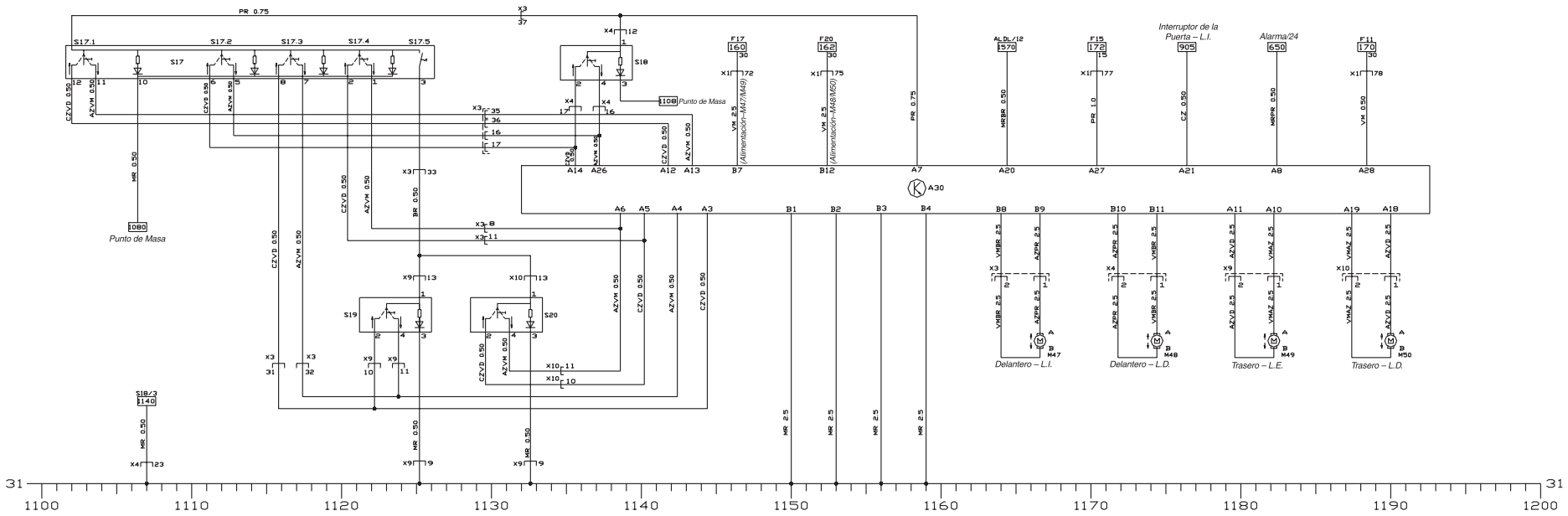

Sistema–Elevacristales Eléctrico (2 Puertas y 4 Puertas)

Cores - Fios / Colores - Alambres / Wires - Colors													
PR= Preto	**MR = Marrom**	**AZ = Azul**	**CZ = Cinza**	**VD= Verde**	***ORN= Laranja***	***PNK = Rosa***	***VL= Violeta***	***VM = Vermelho***	***TAN= Beje***	***BR = Branco***	***AM= Amarelo***	***LT = Claro***	***DK = Escuro***
Negro / Black	*Marrón / Brown*	*Azul / Blue*	*Gris / Gray*	*Verde / Green*	*Naranja /Orange*	*Rosa / Pink*	*Violeta / Purple*	*Rojo / Red*	*Beije / Tan*	*Blanco / White*	*Amarillo / Yellow*	*Claro / Light*	*Oscuro / Dark*

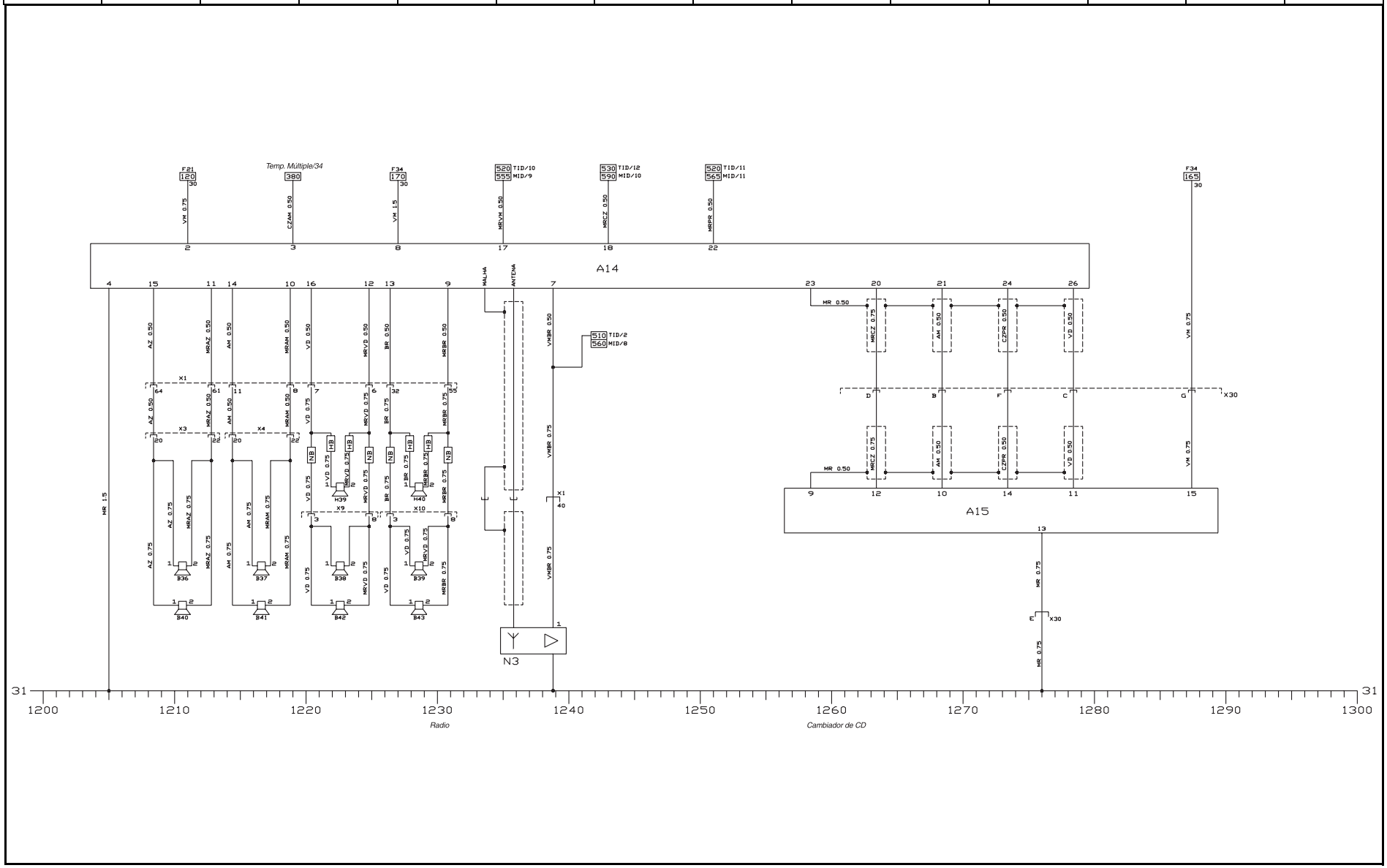

Cores - Fios / Colores - Alambres / Wires - Colors													
PR= Preto *Negro / Black*	**MR = Marrom** *Marrón / Brown*	**AZ = Azul** *Azul / Blue*	**CZ = Cinza** *Gris / Gray*	**VD= Verde** *Verde / Green*	***ORN= Laranja*** *Naranja /Orange*	***PNK = Rosa*** *Rosa / Pink*	***VL= Violeta*** *Violeta / Purple*	***VM = Vermelho*** *Rojo / Red*	***TAN= Beje*** *Beije / Tan*	***BR = Branco*** *Blanco / White*	***AM= Amarelo*** *Amarillo / Yellow*	***LT = Claro*** *Claro / Light*	***DK = Escuro*** *Oscuro / Dark*

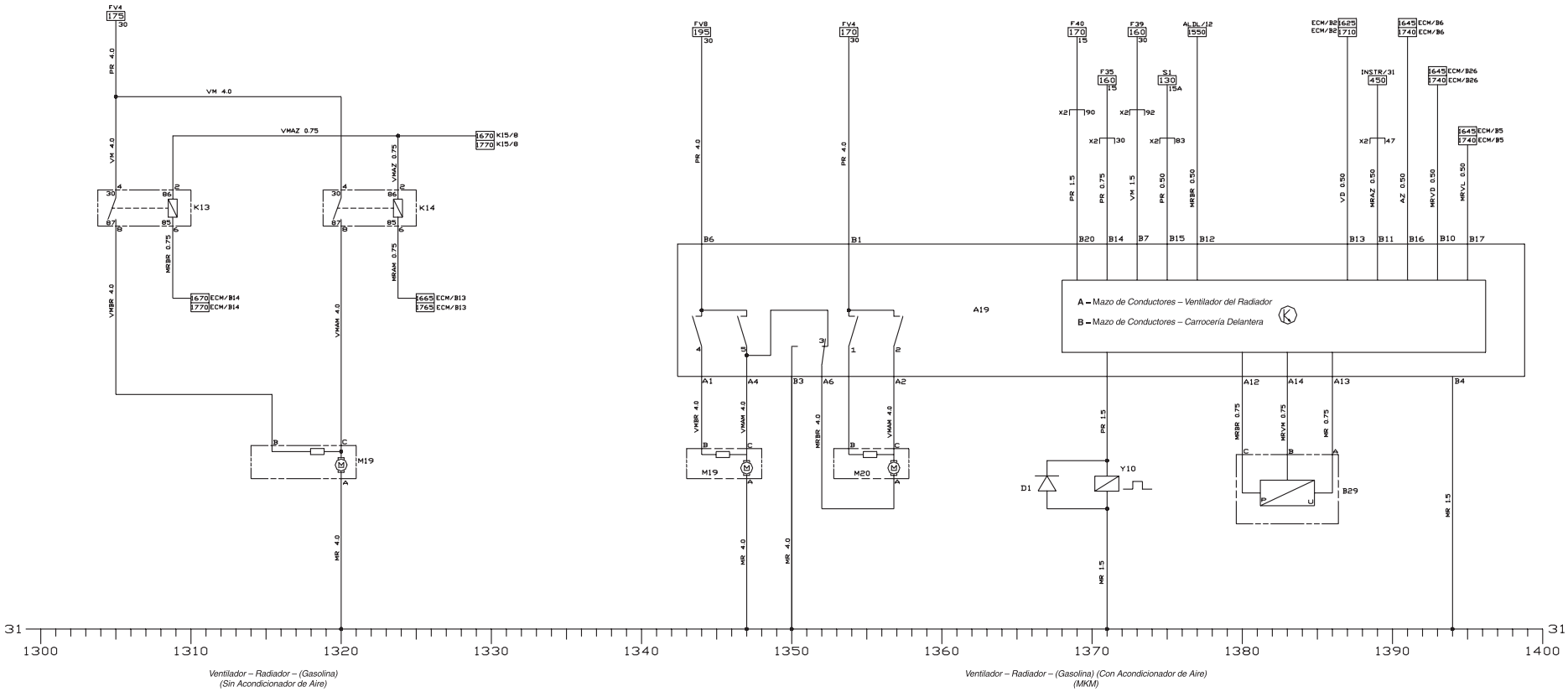

Cores - Fios / Colores - Alambres / Wires - Colors													
PR= Preto	**MR = Marrom**	**AZ = Azul**	**CZ = Cinza**	**VD= Verde**	***ORN= Laranja***	***PNK = Rosa***	***VL= Violeta***	***VM = Vermelho***	***TAN= Beje***	***BR = Branco***	***AM= Amarelo***	***LT = Claro***	***DK = Escuro***
Negro / Black	*Marrón / Brown*	*Azul / Blue*	*Gris / Gray*	*Verde / Green*	*Naranja /Orange*	*Rosa / Pink*	*Violeta / Purple*	*Rojo / Red*	*Beije / Tan*	*Blanco / White*	*Amarillo / Yellow*	*Claro / Light*	*Oscuro / Dark*

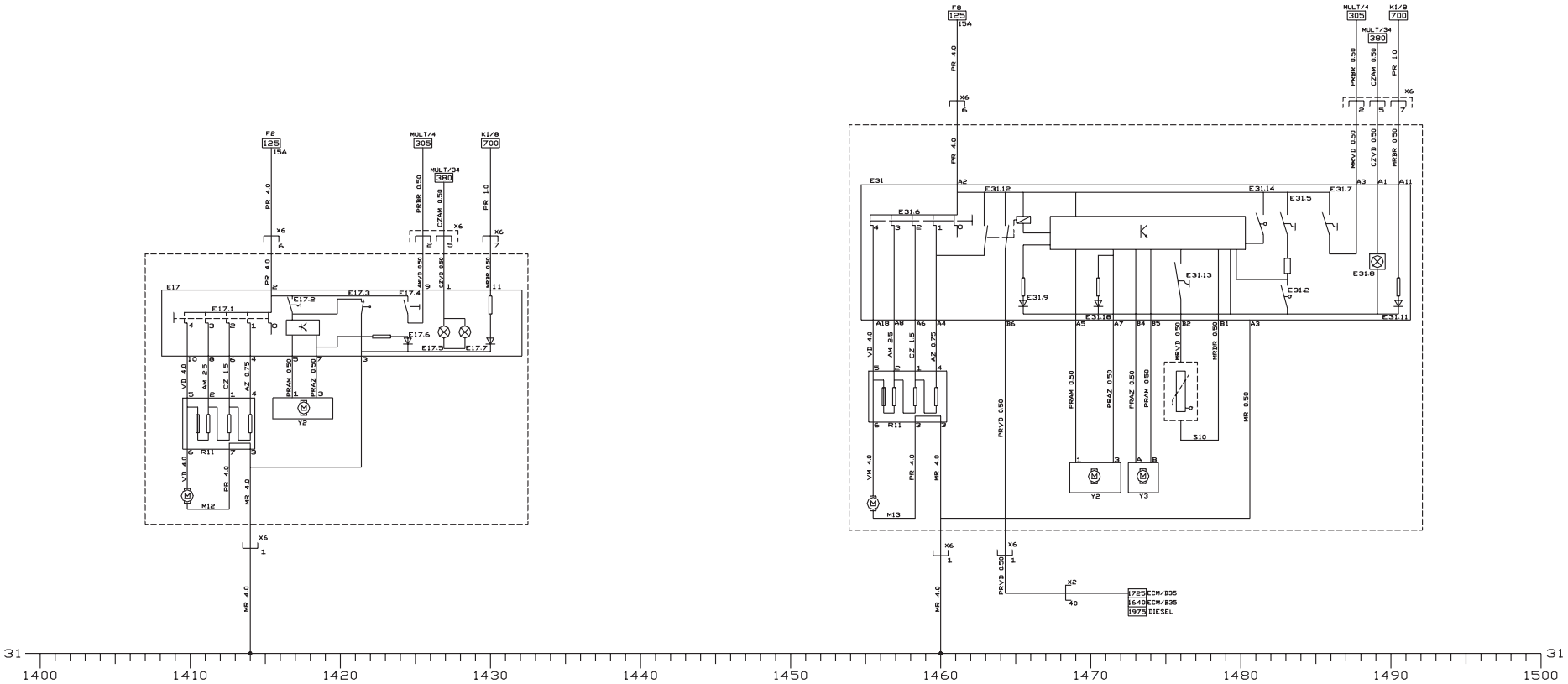

Cores - Fios / Colores - Alambres / Wires - Colors													
PR= Preto *Negro / Black*	**MR = Marrom** *Marrón / Brown*	**AZ = Azul** *Azul / Blue*	**CZ = Cinza** *Gris / Gray*	**VD= Verde** *Verde / Green*	***ORN= Laranja*** *Naranja /Orange*	***PNK = Rosa*** *Rosa / Pink*	***VL= Violeta*** *Violeta / Purple*	***VM = Vermelho*** *Rojo / Red*	***TAN= Beje*** *Beije / Tan*	***BR = Branco*** *Blanco / White*	***AM= Amarelo*** *Amarillo / Yellow*	***LT = Claro*** *Claro / Light*	***DK = Escuro*** *Oscuro / Dark*

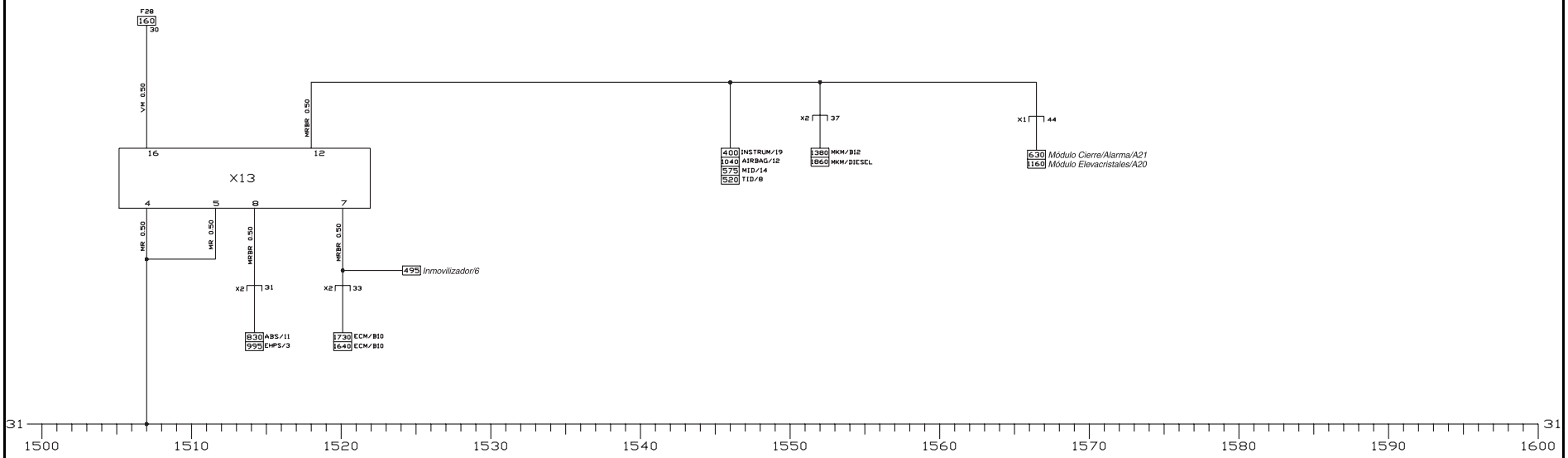

Diagnóstico (ALDL)

Cores - Fios / Colores - Alambres / Wires - Colors													
PR= Preto	**MR = Marrom**	**AZ = Azul**	**CZ = Cinza**	**VD= Verde**	***ORN= Laranja***	***PNK = Rosa***	***VL= Violeta***	***VM = Vermelho***	***TAN= Beje***	**BR = Branco**	***AM= Amarelo***	***LT = Claro***	***DK = Escuro***
Negro / Black	*Marrón / Brown*	*Azul / Blue*	*Gris / Gray*	*Verde / Green*	*Naranja /Orange*	*Rosa / Pink*	*Violeta / Purple*	*Rojo / Red*	*Beije / Tan*	*Blanco / White*	*Amarillo / Yellow*	*Claro / Light*	*Oscuro / Dark*

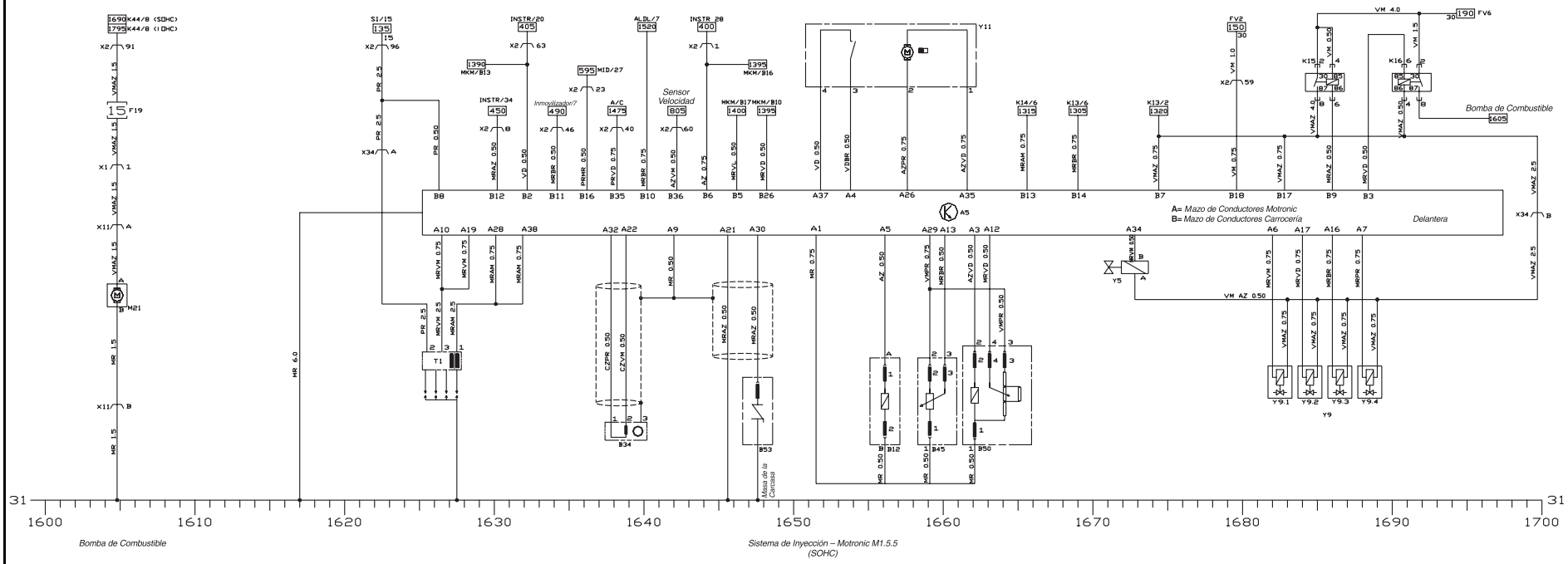

Cores - Fios / Colores - Alambres / Wires - Colors													
PR= Preto	**MR = Marrom**	**AZ = Azul**	**CZ = Cinza**	**VD= Verde**	***ORN= Laranja***	***PNK = Rosa***	***VL= Violeta***	***VM = Vermelho***	***TAN= Beje***	***BR = Branco***	***AM= Amarelo***	***LT = Claro***	***DK = Escuro***
Negro / Black	*Marrón / Brown*	*Azul / Blue*	*Gris / Gray*	*Verde / Green*	*Naranja /Orange*	*Rosa / Pink*	*Violeta / Purple*	*Rojo / Red*	*Beije / Tan*	*Blanco / White*	*Amarillo / Yellow*	*Claro / Light*	*Oscuro / Dark*

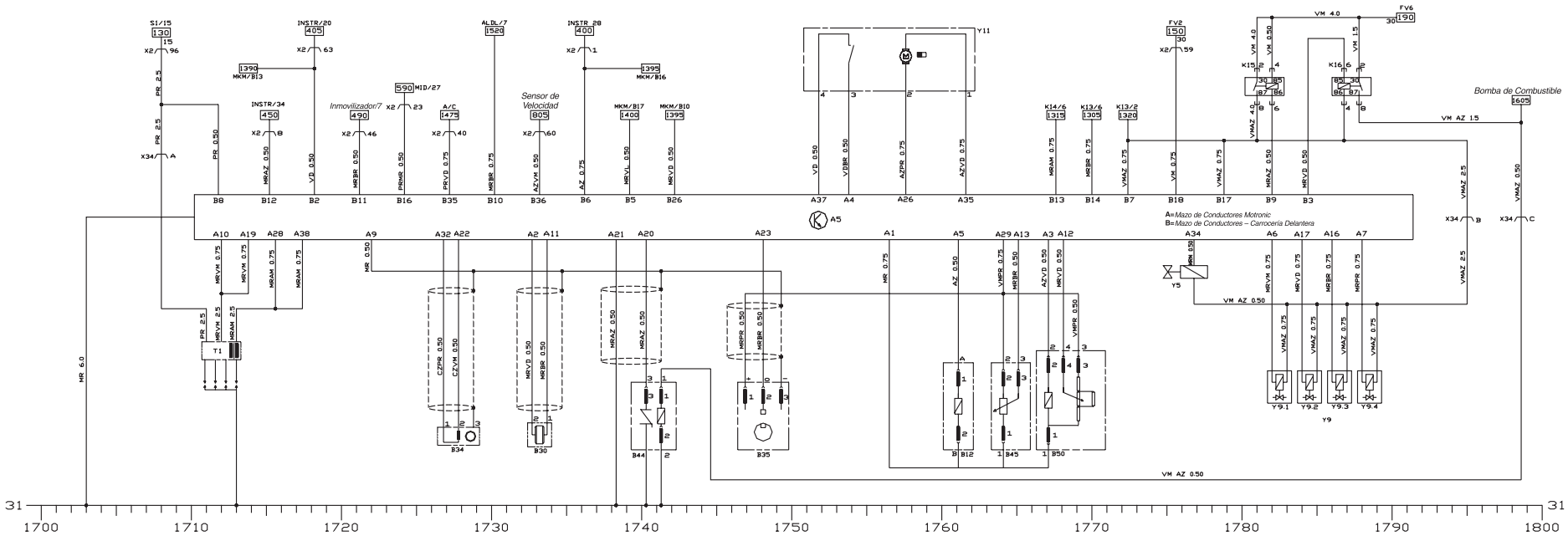

Sistema de Inyección – Motronic (DOHC)

Cores - Fios / Colores - Alambres / Wires - Colors													
PR= Preto *Negro / Black*	**MR = Marrom** *Marrón / Brown*	**AZ = Azul** *Azul / Blue*	**CZ = Cinza** *Gris / Gray*	**VD= Verde** *Verde / Green*	***ORN= Laranja*** *Naranja /Orange*	***PNK = Rosa*** *Rosa / Pink*	***VL= Violeta*** *Violeta / Purple*	***VM = Vermelho*** *Rojo / Red*	***TAN= Beje*** *Beije / Tan*	***BR = Branco*** *Blanco / White*	***AM= Amarelo*** *Amarillo / Yellow*	***LT = Claro*** *Claro / Light*	***DK = Escuro*** *Oscuro / Dark*

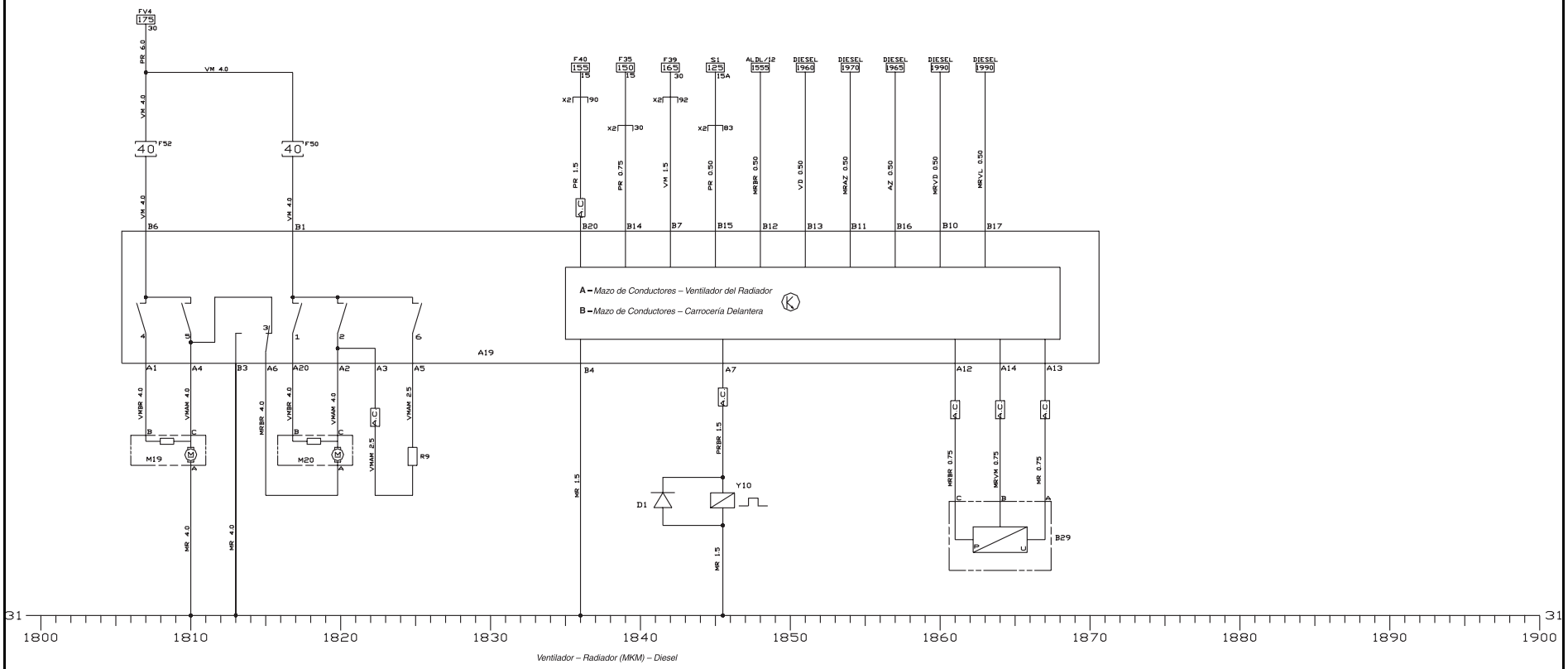

Ventilador – Radiador (MKM) – Diesel

Cores - Fios / Colores - Alambres / Wires - Colors													
PR= Preto	**MR = Marrom**	**AZ = Azul**	**CZ = Cinza**	**VD= Verde**	***ORN= Laranja***	***PNK = Rosa***	***VL= Violeta***	***VM = Vermelho***	***TAN= Beje***	***BR = Branco***	***AM= Amarelo***	***LT = Claro***	***DK = Escuro***
Negro / Black	*Marrón / Brown*	*Azul / Blue*	*Gris / Gray*	*Verde / Green*	*Naranja /Orange*	*Rosa / Pink*	*Violeta / Purple*	*Rojo / Red*	*Beije / Tan*	*Blanco / White*	*Amarillo / Yellow*	*Claro / Light*	*Oscuro / Dark*

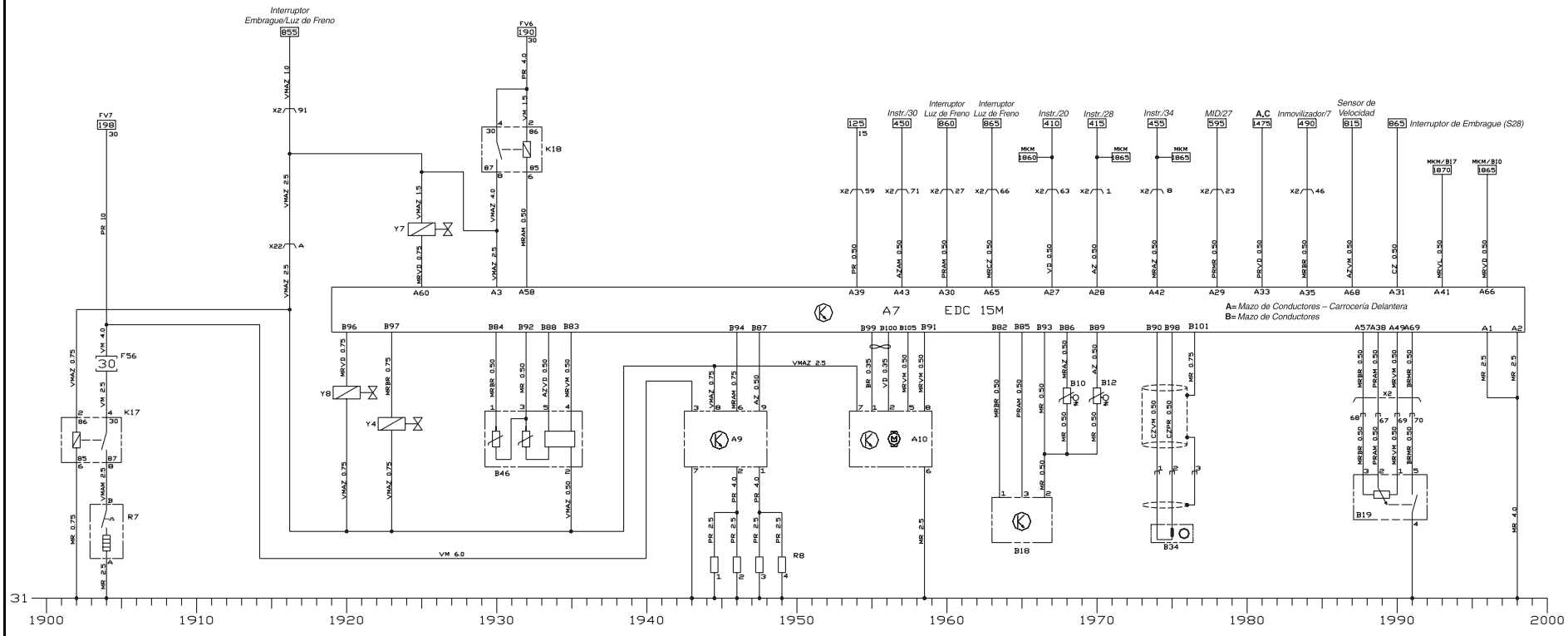

Sistema – Motor Diesel (X20DTL)